GTEC UPS MODEL:

POWER CPS 30-40 kVA

INSTALLATION MANUAL

www.gtec-power.eu

SUMMARY

GLOSSARY OF ACRONYMS 3

PREPARATIONS 4

INSTALLATION ENVIRONMENT 4

ELECTROMAGNETIC COMPATIBILITY 5

OVERVOLTAGE PROTECTION 5

PRELIMINARY INFORMATION FOR INSTALLATION 5

INTERNAL BATTERIES 6

BATTERY MAINTENANCE 6

THREE PHASE CPS – CBT 30/40 7

EXTERNAL PROTECTIVE DEVICES 7

RCD BREAKER (RESIDUAL CURRENT DEVICE) 7

BACKFEED PROTECTION 7

THERMAL-MAGNETIC CIRCUIT BREAKERS 8

SHORT CIRCUIT PROTECTION 8

SHORT CIRCUIT WITHSTANDING 8

INTERNAL PROTECTIVE DEVICES 8

POWER CONNECTION INFORMATION 9

ELECTRICAL CONNECTIONS 10

WIRING DIAGRAMS FOR CONNECTING TO THE ELECTRICAL SYSTEM 10

CPS COMMISSIONING 11

POSITIONING INFORMATION 12

POWER CONNECTION INSTALLATION 13

CPS DETAILS 16

POWER CONNECTION DETAILS 17

COMMUNICATION INTERFACE 18

R.E.P.O. 18

PROGRAMMABLE IN – OUT SIGNALS 18

USB/SERIAL RS232 19

COMMUNICATION SLOTS 19

APPENDIX 20

CHECKING THE PACKAGING CONTENTS 20

FIXING THE SIGNAL CABLE 21

JUMPERS INSTALLATION/REMOVAL 22

ANCHORING THE CPS TO THE FLOOR 22

REMOVING DOOR 23

GLOSSARY OF ACRONYMS

Acronym	ITEM	Description
CPS	Central Supply System	*Life safety emergency system conforming to EN50171 standard*
CBT	Three Phase CPS	*Three phase output voltage central supply system*
SLOT	Expansion Slots	*Slot to accomodate the communication cards and relay expansion board*
COM	Communication Board	*It includes USB + RS232 communication ports + EPO signal interface + contact interface*
PAR	Parallel Board	*Communication interface card between CPS for parallel function*
SWBATT	Battery Switch	*Internal Battery fuse holders.* *Warning: these fuse holders disconnect only the batteries contained in the CPS cabinet*
SWMB	Manual Bypass Switch	*Maintenance bypass switch disconnector*
SWIN	Mains Input Switch	*Mains input switch disconnector*
SWBYP	Bypass Input Switch	*Bypass line input switch disconnector*
SWOUT	Output Switch	*Output switch disconnector*
B+	-	*Positive battery voltage/current/temp.*
B-	-	*Negative battery voltage/current/temp.*

PREPARATIONS

READ THE "SAFETY MANUAL" BEFORE STARTING THE CPS INSTALLATION

INSTALLATION ENVIRONMENT

When choosing the site in which to install the CPS and the Battery Cabinet, the following points should be taken into consideration:

- Avoid dusty environments
- Check that the floor is level and capable of withstanding the weight of the CPS and the Battery Cabinet
- Avoid cramped environments that could impede the normal maintenance activities
- The relative humidity should not exceed 90%, non-condensing
- Avoid installing the equipment in places exposed to the direct sunlight or hot air
- This equipment is intended for use in a controlled environment; hence the temperature must be regulated within a range between 0 and 40°C



The CPS may be operated within an ambient temperature of between 0 to 40°C. The recommended working temperature for the CPS and batteries is between 20 to 25°C. Please note, if the battery has an average life of 5 years at a working temperature of 20°C, the life is halved if the working temperature is increased to 30°C.

To maintain the temperature of the installation room to within the range indicated above, there must be a system for eliminating the dissipated heat (the CPS kW / kcal/h / B.T.U./h dissipation values are shown in the table below). The methods that may be used are:

- *Natural ventilation*
- *Forced ventilation*, recommended if the outside temperature is less (e.g. 20°C) than the temperature at which the CPS or Battery Cabinet is to be operated (e.g. 25°C)
- *Air-conditioning system*, recommended if the outside temperature is higher (e.g. 30°C) than the temperature at which the CPS or Battery Cabinet is to be operated (e.g. 25°C)

	AMBIENT AND DIMENSION DETAIL	***Table 1***
Ambient temperature for the CPS	0 - 40°C	
Recommended temperature for battery life	20 - 25°C	
Range of relative Humidity	5 - 95% (without condensing)	
Maximum Operating Altitude (according with IEC/EN 62040-3)	Full power up to 1000 m a.s.l. (power derating of 0.5% for each 100 m between 1000 and 4000 m)	
Storage Temperature	CPS: -25°C ÷ +60°C	Batteries: -15°C ÷ +40°C
Isolation protection	IP20 (IP21, IP30, IP31 are available on request)	
Colour	RAL 7016	
Ventilation	Forced, front to rear (Air filter Door as option)	
Cable input	Bottom	
Pollution degree	PD2	
Vibration resistance	1 m/s^2	
Overvoltage category / Protective class	OVC II / class I	
CPS Dimension (WxDxH) [mm]	440 x 840 x 1320	
CPS size [kVA]	**30**	**40**
Size according to EN 50171 [kW]	**24**	**32**
Shipping Weight without batteries [kg]	132	136
Shipping Weight with full battery configuration [kg]	441	445
Weight without batteries [kg]	112	116
Weight with full battery configuration [kg]	421	425
Battery (maximum quantity that can be housed internally)	Space for: 3 x (20+20) 7/9 Ah blocks (Output transformer alternative to internal batteries)	

	ELECTRICAL INFORMATION TABLE *Table 2*	
	30 kVA	**40 kVA**
Power [kVA / kW]	30/30	40/40
V Input [V]	400 ± 20% (3PH + N)	
Frequency Input [Hz]	50 - 60	
V Output [V]	380-400-415 (3PH + N)	
Frequency Output [Hz]	50 / 60	
Power dissipated @ 100% triphase load (1)	1.21 kW 1040 kCal/h 4130 B.T.U./h	1.61 kW 1385 kCal/h 5500 B.T.U./h
Flow rate of the fans for removing the heat from the installation room (2)	645 m^3/h	860 m^3/h

(1) 3.97 BTU / h = 1 kcal / h
(2) To calculate the air flow rate, the following formula may be used: Q [m3/h] = 3.1 x Pdiss [Kcal/h] / (ta - te) [°C]
Pdiss is the power expressed in Kcal/h dissipated by all the devices installed in the installation environment.
ta= ambient temperature, te=outside temperature. To take leaks into account, the value obtained should be increased by 10%.
The table shows an example of a flow rate with (ta - te)=5°C and a rated resistive load (pf=1).
(Note: This formula is applicable if ta>te, only; if the CPS installation does not require an air-conditioning system).

ELECTROMAGNETIC COMPATIBILITY

This CPS product conforms to the current electromagnetic compatibility (EMC) regulations (C2 class). It may cause radio interference in the home environment. The user may have to adopt supplementary measures.
This product is for professional use in industrial and commercial environments. Connections to USB must be made with the cable provided; the connection to the RS232 (RJ10 connector) have to be made with shielded cables less than 3 metres long.

OVERVOLTAGE PROTECTION

The CPS has been designed to be powered by an AC mains supply with category 2 voltage spikes. if it connected to an AC supply with different characteristics or if it is potentially subject to even transitory overvoltage, external protection equipment must be installed to it.

PRELIMINARY INFORMATION FOR INSTALLATION

ALL OPERATIONS DESCRIBED IN THIS SECTION MUST BE PERFORMED BY QUALIFIED AND TRAINED PERSONNEL ONLY.



Our Company assumes no liability for damages caused by incorrect connections or operations not described in this manual.



The following operations have to be performed with the CPS disconnected from the power source, switched off and with all equipment switches open.
Before making the connection, open all cabinet switches and verify that the CPS is completely isolated from all power sources: battery and AC power supplies. In particular, check that:
- ***the CPS input line is completely disconnected***
- ***the CPS bypass line is completely disconnected***
- ***the CPS battery line switch/fuses are open***
- ***all CPS switches are in the open position***
- ***check with a multimeter that there are no dangerous voltages***

The first connection to be made is the protective conductor (earth wire), this must be connected to the bolt marked as PE.
The CPS must only be operated whilst connected to a suitable earthing system.

The input Neutral must always be connected.

ATTENTION: a three-phase 4-wire distribution system is required.
The standard CPS version must be connected to a 3 Phase + Neutral + PE (ground protection) power source.
Ensuring that the incoming phase rotation is within a clockwise direction.

ATTENTION: After the installation operations are completed, refit all of the cabinet protection panels using the appropriate screws supplied.

INTERNAL BATTERIES



CAUTION: If the CPS has INTERNAL BATTERIES, <u>follow all the *PRECAUTIONS AND SAFETY RULES*</u> listed below.

- The CPS has HAZARDOUS electrical voltages inside it, even when the input and/or battery switches are off. The inside of the CPS is protected by safety panels which should not be removed by untrained personnel. All installation and maintenance or operations involving access inside the CPS require the use of tools and may ONLY be performed by trained personnel.
- The CPS contains an internal source of energy: batteries. All terminals and sockets may be live even without connecting the CPS to the mains supply.
- The total battery voltage may be potentially dangerous: it may generate an electric shock. The battery compartment is protected by safety panels which should not be removed by untrained personnel. All installation and maintenance of the batteries involve access inside the CPS and require the use of tools: such operations may ONLY be performed by trained personnel.
- Replaced batteries must be considered TOXIC WASTE and treated accordingly (refer to RAEE-WEEE manual “DISPOSAL OF THE APPLIANCE AND/OR ITS PARTS)”. Do not dispose of batteries in a fire: they may explode. Do not attempt to open the batteries: they are maintenance-free. In addition, the electrolyte is harmful to the skin and eyes and can be toxic.
- Do not turn on the CPS if it is leaking fluid or if you see a residual white powder.
- Do not allow water, liquids in general and/or other foreign objects to get inside the CPS.
- Do not open the battery fuse holder while the CPS is powering the load in battery operation mode. The interruption of the battery DC may cause an electrical arc resulting in equipment failure and/or fire. In addition, if there is no mains power, the energy to power the load is provided by the batteries, therefore opening the battery fuses would lead to the shutdown of the load.
- Follow these recommendations when working on the batteries:
    - Remove wristwatches, rings and other metal objects
    - Use tools with insulated handles
    - Wear rubber shoes and gloves
    - Do not lay tools or metal objects on top of the batteries
    - Disconnect the charging source before connecting or disconnecting the battery terminals
- When replacing batteries, use only the same type and number of batteries.



ATTENTION: Risk of explosion if batteries are replaced by an incorrect type

For correct interconnection of the batteries, refer to the wiring diagrams available to service personnel only or to the battery kit installation manual.

BATTERY MAINTENANCE



WARNING: HAZARDOUS VOLTAGE INSIDE!
Never open the cover of the battery compartment for any reason. If any anomaly is noted, please contact the service department.



In order to preserve a high level of efficiency and a good lifespan, the batteries must be periodically charged using the CPS itself.

Batteries are subject to self-discharge. If the internal batteries or the Battery Cabinets are stocked and not immediately installed, a full charge must be performed.
In order to re-charge the batteries, it is required to connect the Battery Cabinet or the batteries internal to the CPS unit for at least 24hrs in “NORMAL MODE” or “STAND-BY CB ON”.
If a long battery stocking period is planned, please contact the service department.

EXTERNAL PROTECTIVE DEVICES

RCD BREAKER (RESIDUAL CURRENT DEVICE)

If an input isolation transformer is not present, the neutral from the mains power supply is connected to the CPS output neutral. As a result, there will be no change to the neutral arrangements of the installation:

THE CPS INPUT NEUTRAL IS CONNECTED TO THE CPS OUTPUT NEUTRAL
THE DISTRIBUTION SYSTEM THAT POWERS THE CPS IS NOT MODIFIED BY THE CPS



The neutral condition is only modified if an isolation transformer is present or when the CPS works with the neutral isolated upstream.
Make sure that the equipment is properly connected to the input neutral, otherwise serious damage can occur to the CPS.

During normal operation, when the mains supply is present, an RCD breaker at the input of the CPS will activate if a fault occurs at the output side, since the output circuit is not isolated from the input.
In any case, other RCD breakers may still be installed at the output, preferably in coordination with those present at the input.
The earth leakage current may exceed 3.5mA (max 20mA), so the RCD breaker located upstream must have the following characteristics:

- Differential current adjusted to the sum of CPS + Load; we recommend keeping a suitable margin to prevent nuisance tripping (100mA min. - 300mA recommended)
- Type B
- Delay of at least 0.1s

NOTE for DUAL INPUT connection:

1. A single RCD breaker must be installed upstream at the point where the sources divide to supply the standard input and the bypass input of the CPS (refer to *Table 11*).

2. If the standard input and the bypass input are supplied from two separated sources, then it is required to use a single RCD device for both sources.

BACKFEED PROTECTION

The CPS has an internal protection against backfeed. This protection acts by means of a sensing circuit which turns the inverter off if a fault within the static switch is detected. During this condition, to avoid interrupting the supply to the connected load, the CPS switches to the bypass line.
If this fault occurs during battery operation, the inverter is stopped.
A volt free contact can be configured to drive a disconnecting device to be installed upstream of the bypass input to the CPS, in this case when a backfeed fault occurs, the system opens the external disconnecting device, hence avoiding the requirement to stop the inverter (refer to the user manual to configure this option).



The label supplied with the CPS named "Risk of Voltage Backfeed" and included in the accessory box, must be affixed to all disconnectors installed within the electrical system upstream of the CPS.

THERMAL-MAGNETIC CIRCUIT BREAKERS

As previously explained, the CPS has protection devices for output faults as well as for internal faults.
In order to configure the power source, a thermal-magnetic switch must be installed upstream of the CPS.
Please follow the indications in the table below:

	Automatic external protective devices	*Table 3*
CPS model	**Mains input**	**Bypass Input (DI version)**
30	80A (trip characteristic curve "C")	80A (trip characteristic curve "C")
40	100A (trip characteristic curve "C")	100A (trip characteristic curve "C")

If the protective device upstream of the CPS interrupts the neutral wire, it must also interrupt all of the phase wires at the same time (4-pole breaker).
Please select the thermal-magnetic circuit breakers in accordance with the "SHORT CIRCUIT WITHSTANDING" below.

Output protections (recommended values for selectivity)	*Table 4*
Normal fuses (GI)	In (Nominal current)/4
Normal switches (C curve)	In (Nominal current)/4
Ultra-fast fuses (GF)	In (Nominal current)/2

SHORT CIRCUIT PROTECTION

If a failure at the output occurs, the CPS protects itself by limiting the value and duration of the output current (short-circuit current). These values also depend on the operating status of the CPS at the time of the failure; there are two different scenarios:

- CPS in NORMAL OPERATION with a bypass supply: the load is instantly switched to the bypass line (I^2t = 20000 A^2s): the input line is connected to the output without any internal protection (blocked after t > 500ms).
- CPS in BATTERY OPERATION or in NORMAL OPERATION without a bypass supply: the CPS protects itself by supplying 2.7 times the nominal current to the output for the first 200ms, which is then reduced to 1.5 times nominal for 300 ms. After this time (500 ms) it switches off.

SHORT CIRCUIT WITHSTANDING

This equipment is rated for use in a circuit capable of delivering no more than 6000 symmetrical amperes (6 kA), at 415V maximum.

INTERNAL PROTECTIVE DEVICES

The table below shows the sizes of the switch disconnectors of the CPS and the sizes of the battery fuses: these devices are accessible from the front.
There is also data in relation to the rating of the internal fuses (not accessible) which protect the input and output lines, along with the maximum input and rated output currents.
Fuses must be replaced with ones of the same size and the characteristics as indicated in the table below.

	Switches and internal protective devices					*Table 5*
	Disconnect switches and fuse holders			Internal Fuses		
CPS model	**SWIN / SWBYP**	**SWOUT / SWMB**	**SWBATT(*)**	**Rectifier input fuses**	**Battery stage fuses**	**Output fuses**
30	63A (4P)	63A (4P)	80A gR 500V (22x58)	63A FF 240V (63LET)	50A 500VDC FAST ACTING (50FE)	80A FF 240V (80LET)
40	100A (4P)	100A (4P)	100A gR 500V (22x58)	80A FF 240V (80LET)	63A 500VDC FAST ACTING (63FE)	80A FF 240V (80LET)

(*) *Warning: SWBATT disconnect only the batteries contained in the CPS cabinet*

POWER CONNECTION INFORMATION

INPUT AC Line Connection 3PH + N + PE							*Table 6*
CPS size [kVA]	Max current [A]	Terminal L1, L2, L3, N		PE	Suggested wire L1, L2, L3, N, PE (*)		
		Maximum cross section [sqmm]	Max Tightening torque [Nm]	Bolt size	Cross sectional area L1, L2, L3 [N x sqmm]	Cross sectional area N, PE (**) [N x sqmm]	Type
30	63	35	4.5	M6	1 x 6	1 x 10	FG16R16-0,6/1 kV (90°C) or FG7R (90°C)
40	80	35	4.5	M6	1 x 10	1 x 16	FG16R16-0,6/1 kV (90°C) or FG7R (90°C)

BYPASS AC Line Connection 3PH + N + PE (Dual Input)							*Table 7*
CPS size [kVA]	Max Continuous current [A]	Terminal L1B, L2B, L3B, N		PE	Suggested wire L1B, L2B, L3B, N, PE (*)		
		Maximum cross section [sqmm]	Tightening torque [Nm]	Bolt size	Cross sectional area L1B, L2B, L3B [N x sqmm]	Cross sectional area N, PE (**) [N x sqmm]	Type
30	48	35	4.5	M6	1 x 6	1 x 10	FG16R16-0,6/1 kV (90°C) or FG7R (90°C)
40	64	35	4.5	M6	1 x 10	1 x 16	FG16R16-0,6/1 kV (90°C) or FG7R (90°C)

OUTPUT AC Line Connection 3PH + N + PE							*Table 8*
CPS size [kVA]	Nominal current In [A]	Terminal L1, L2, L3, N		PE	Suggested wire L1, L2, L3, N, PE] (*)		
		Maximum cross section [sqmm]	Tightening torque [Nm]	Bolt size	Cross sectional area L1, L2, L3 [N x sqmm]	Cross sectional area N, PE (**) [N x sqmm]	Type
30	43.5	35	4.5	M6	1 x 6	1 x 10	FG16R16-0,6/1 kV (90°C) or FG7R (90°C)
40	58	35	4.5	M6	1 x 10	1 x 16	FG16R16-0,6/1 kV (90°C) or FG7R (90°C)

Input Battery DC Line Connection BATT+, BATT-, BATT N, PE (Nominal voltage +240V, -240V)							*Table 9*
CPS size [kVA]	Rated Current [A]		Terminal BATT +, BATT -, BATT N		PE	Suggested wire BATT +, BATT -, BATT N, PE (*)	
	@nominal battery voltage	@end of discharge voltage	Maximum cross section [sqmm]	Tightening torque [Nm]	Bolt size	Cross sectional area +, -, N, PE (**) [N x sqmm]	Type
30	65	82	35	4.5	M6	1 x 16	FG16R16-0,6/1 kV (90°C) or FG7R (90°C)
40	87	110	35	4.5	M6	1 x 16	FG16R16-0,6/1 kV (90°C) or FG7R (90°C)

(*) *The suggested cross section refers to 90°C rated cables with an ambient temperature of 30°C. If different cables are used, or installed at a higher ambient temperature, the cable size needs to be reviewed.*
The cross sections indicated in the table refer to a maximum length of 10 metres

(**) *We recommend using at least two PE connection cables. If only one cable is used, it must have a minimum section of 16 mm².*

ELECTRICAL CONNECTIONS

WARNING: a 4-wire three-phase distribution system is required.
The CPS must be connected to a power supply source providing 3-phase + neutral + PE (protective earth) of a TT, TN or IT type. The phase rotation must be correct.
In the IT system a 4-pole thermal-magnetic circuit breaker is mandatory.
Optional TRANSFORMER BOXES to convert the distribution systems from 3-wire to 4-wire are available upon request.

WIRING DIAGRAMS FOR CONNECTING TO THE ELECTRICAL SYSTEM

CPS w/o any variation in the neutral condition

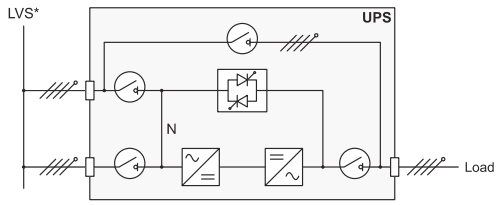

CPS with galvanic isolation at the output

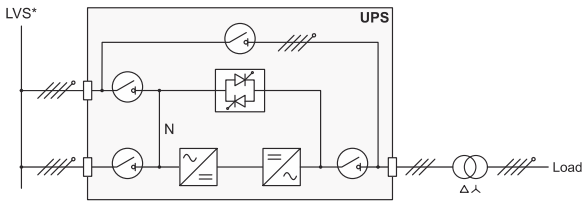

CPS with galvanic isolation at the input

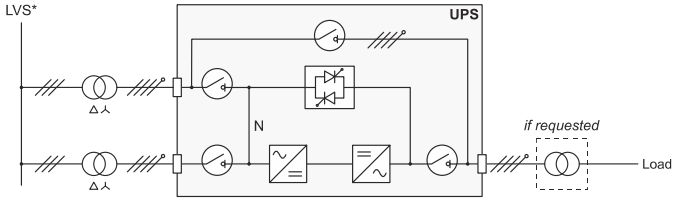

* LVS: low voltage source

Table 10

Dual Input:
If the Dual Input option is present and the bypass is supplied from a separate low voltage source, protective devices must be present on both the main input supply and the bypass supply.
Note: the neutral of the input and the bypass supplies are connected together inside the equipment, therefore they must be referenced to the same potential. If the two power supplies are different, an isolation transformer has to be used on either of the two inputs.

CPS with galvanic isolation

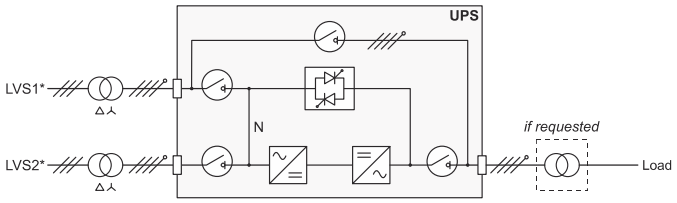

CPS with galvanic isolation at the input

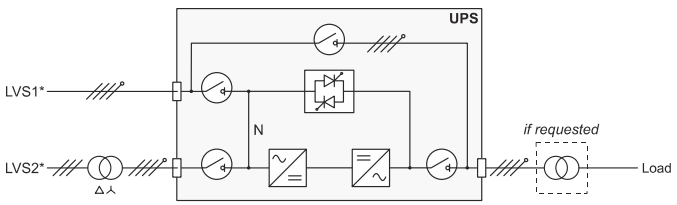

CPS with galvanic isolation at the Bypass input

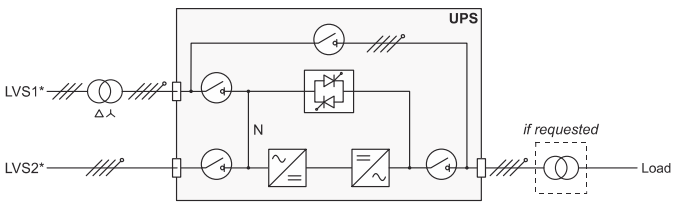

* LVS1: low voltage source 1; LVS2: low voltage source 2;

Table 11

CPS COMMISSIONING

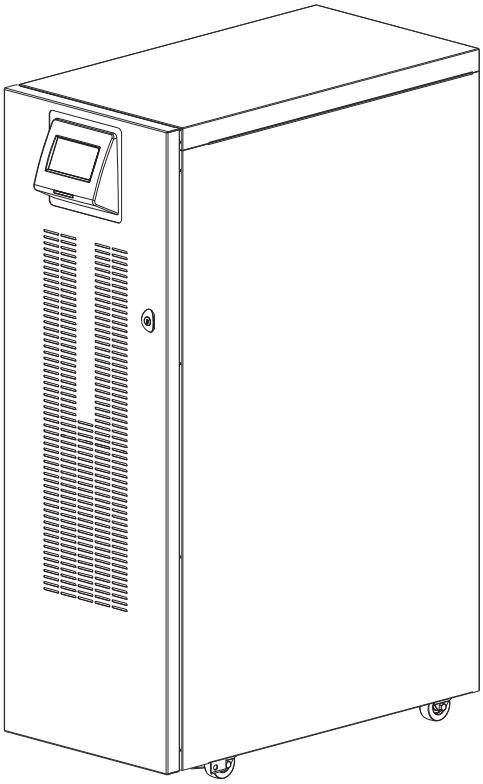

NOTE: some images contained in this document are for information purposes only and may not faithfully demonstrate the parts of the product they represent.

CPS CABINET POSITIONING

When positioning, take into account that:
- the wheels are to be used for final positioning only. Suitable moving equipment must be used to transport the CPS near to the final position.
- plastic parts and the door are not able to act as pushing points or handles.
- Ensure that there is sufficient free space in front of the CPS for user operation and maintenance (≈1.5 m).
- no objects should be placed on the upper part of the CPS.

WARNING!
The CPS must be positioned on a level floor.
Ensure that the floor can support the total weight of the system (refer to the table within “INSTALLATION ENVIRONMENT”).

If side access isn’t available take care during the installation to leave sufficient cable to pull the CPS out for maintenance purposes.
Do not place any objects on the top. Do not climb up on the CPS. The chassis isn’t designed to hold up the weight of a person.

After positioning, if required, re-use the bracket which fastened the CPS to the pallet to anchor the CPS to the floor (refer to “POWER CONNECTION INSTALLATION” for details).

This central supply system (CPS) conforms to all binding safety and electromagnetic compatibility regulations applicable to this type of product. Compliance with these regulations has been certified by accredited third-party bodies.
In addition to that prescribed in the directives, during the design phase our Company made every effort to assess and eliminate or minimise all risks deriving both from correct use and possible reasonably foreseeable incorrect operations.
Civil society and the institutions place special emphasis on protecting certain categories of people (pregnant women, minors, people with cognitive and/or motor disabilities, people wearing pacemakers).
That being said, despite the fact that the CPS is a product reserved for professional and non-domestic use, the above-mentioned people must not access the areas where the CPS is installed.
Moreover, the CPS must be installed in an area that cannot be accessed by domestic animals or where the latter cannot station in.

POSITIONING INFORMATION

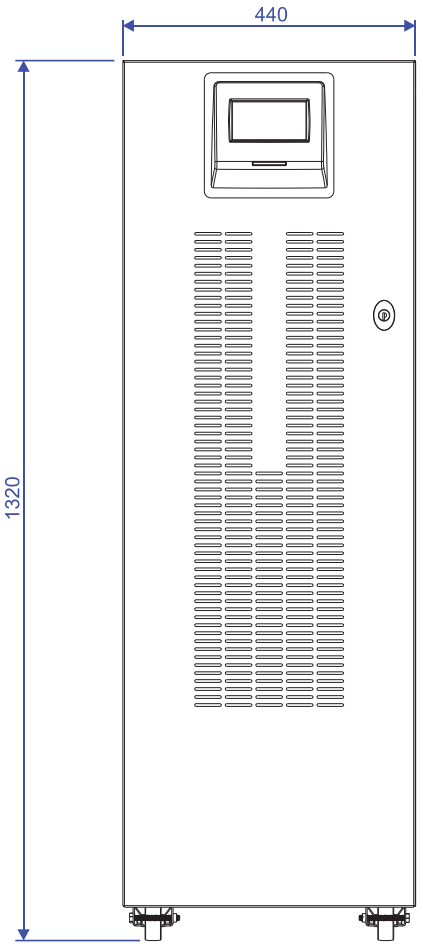

FRONT VIEW

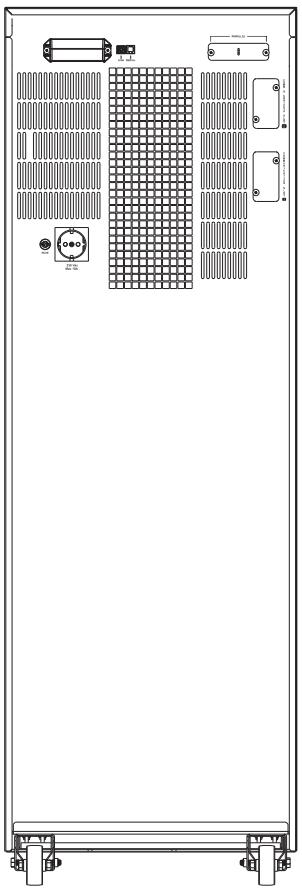

REAR VIEW

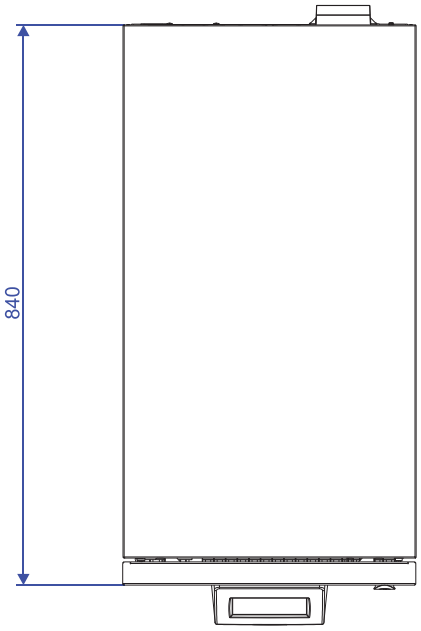

TOP VIEW

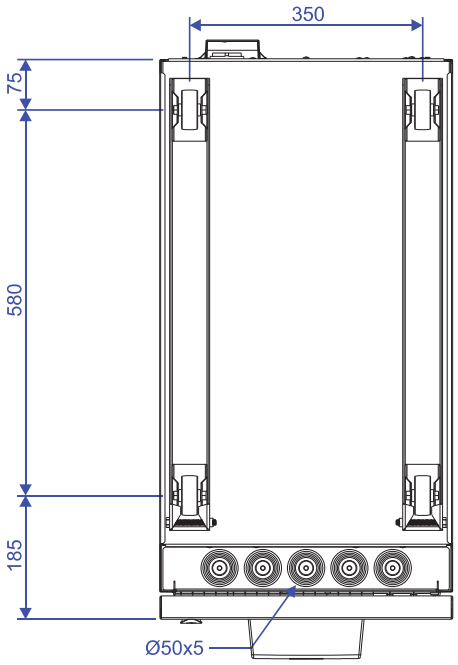

BOTTOM VIEW

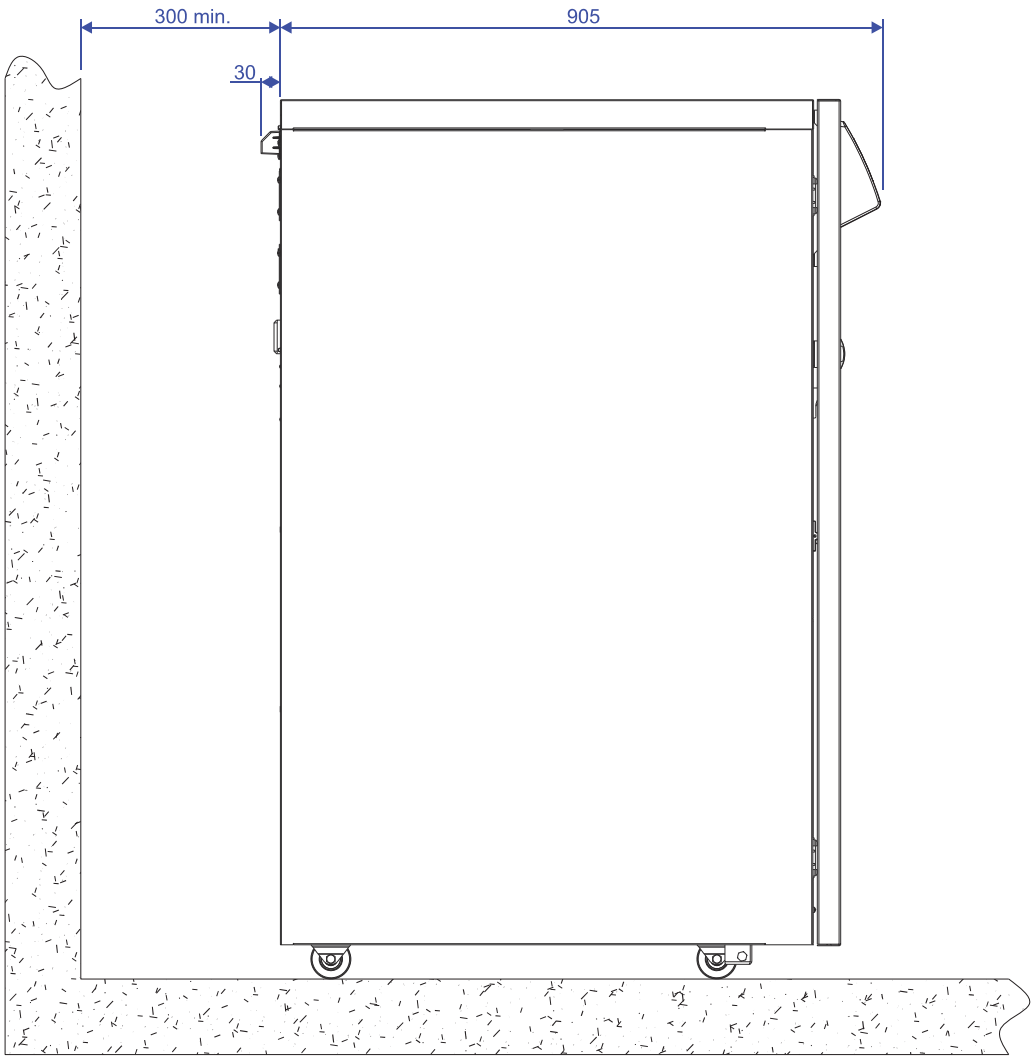

SIDE VIEW

POWER CONNECTION INSTALLATION

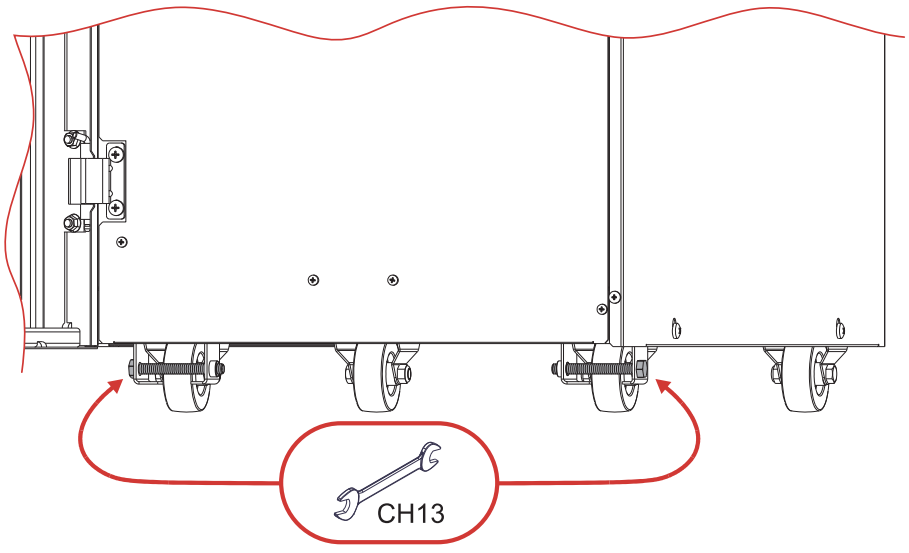

BEFORE ANY OPERATION, LOCK THE FRONT WHEELS USING THE SPECIFIC SCREW

REMOVE THE FRONT TERMINAL COVER

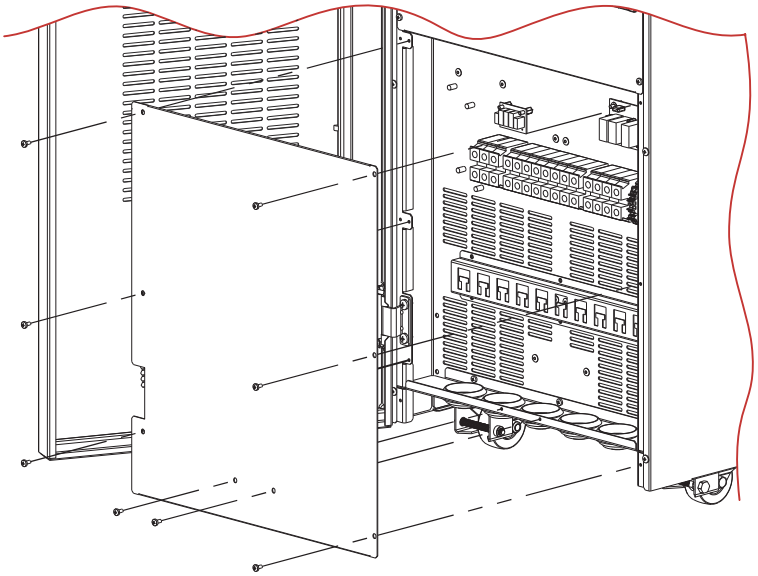

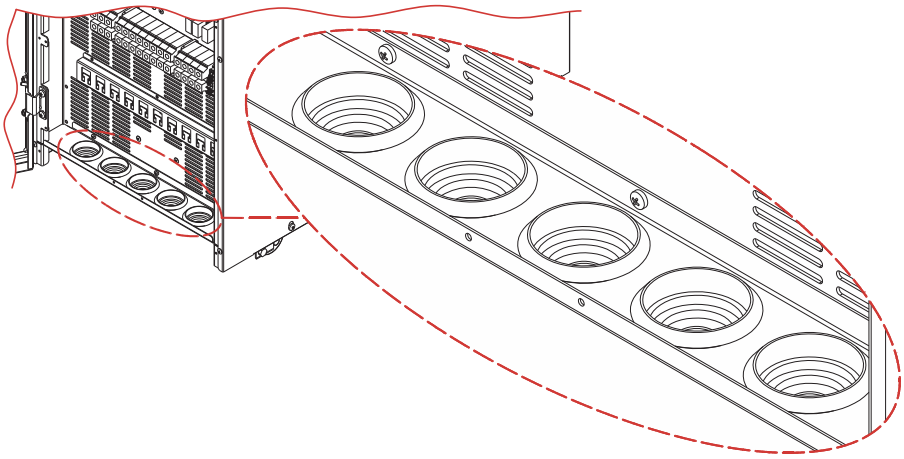

CUT A SUITABLE HOLE IN THE CABLE GLANDS PROVIDED TO MAINTAIN THE REQUIRED DEGREE OF PROTECTION

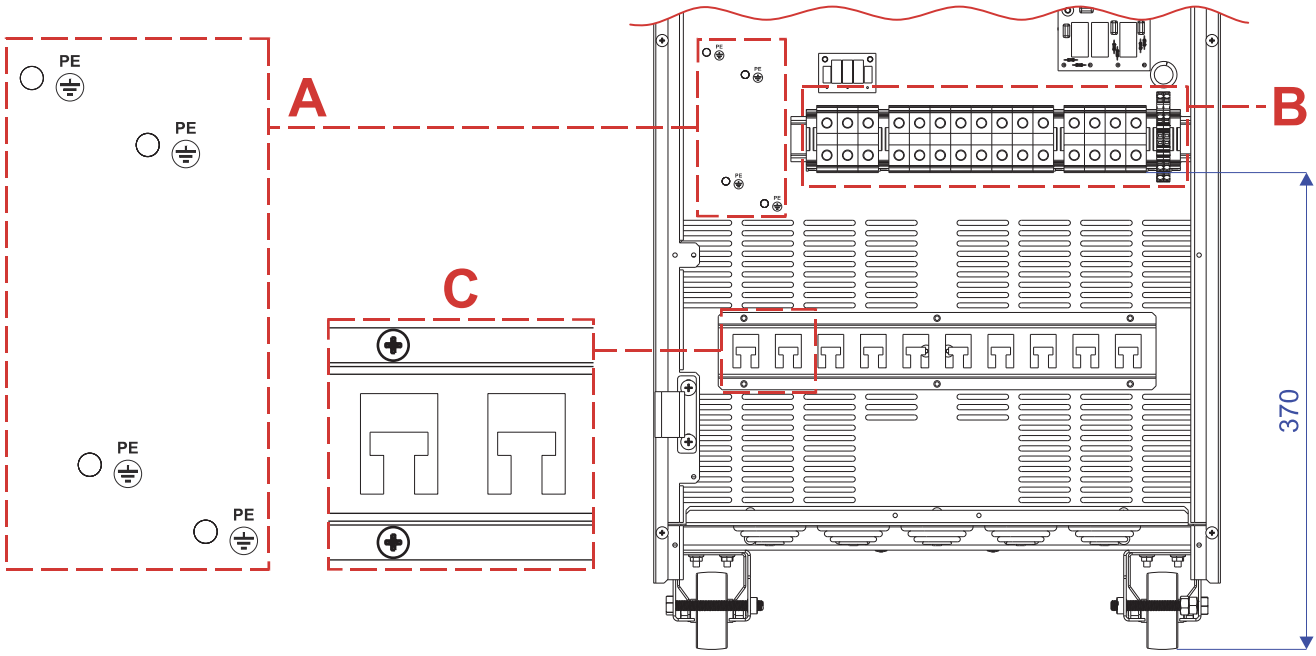

A. PE CONNECTION

B. TERMINAL BLOCKS (FOR MORE INFORMATION REFER TO “POWER CONNECTION DETAILS”)

C. CABLE SECURING BRACKET

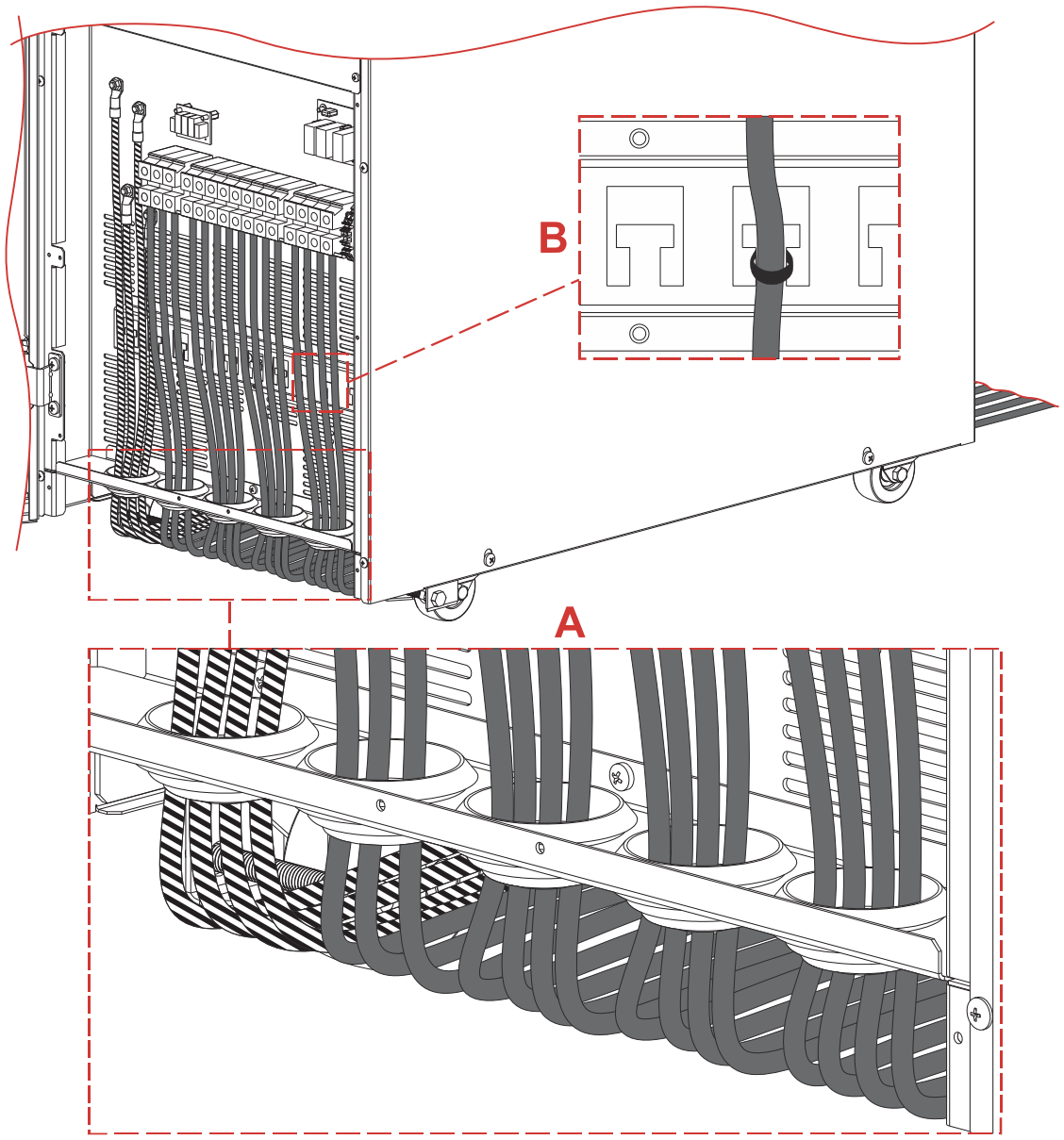

A. CABLE POSITION DETAIL

B. EXAMPLE OF THE WIRE BEING SECURED USING CABLE TIES

It should be recommended to bring each group of cables (Input, Output, Battery) through one hole separately to avoid Eddy Current.

REFIT THE FRONT TERMINAL COVER USING THE PREVIOUSLY REMOVED SCREWS.

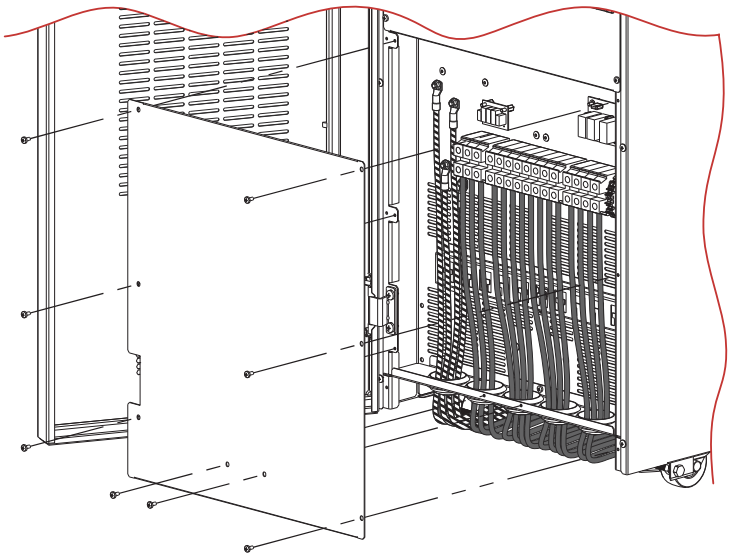

CPS DETAILS

FRONT

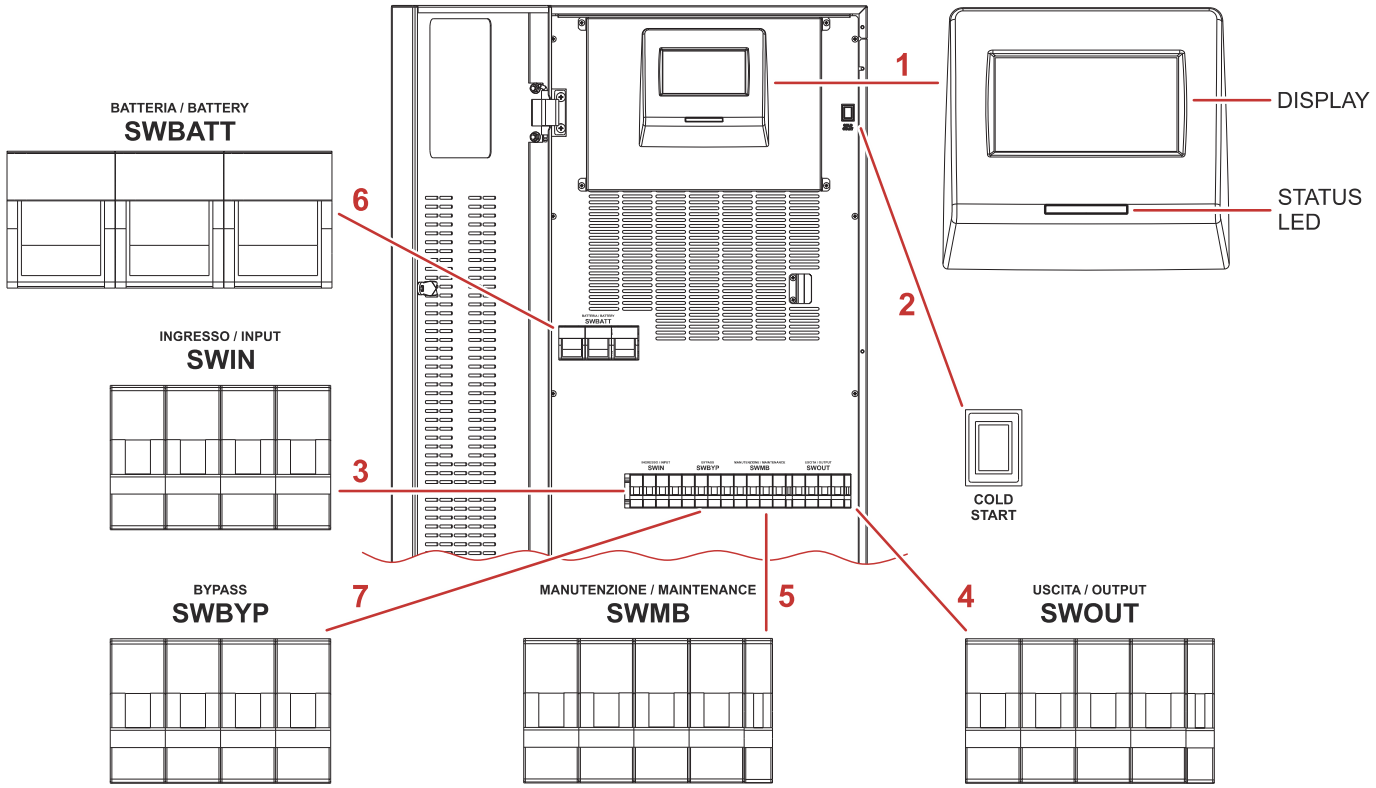

REAR

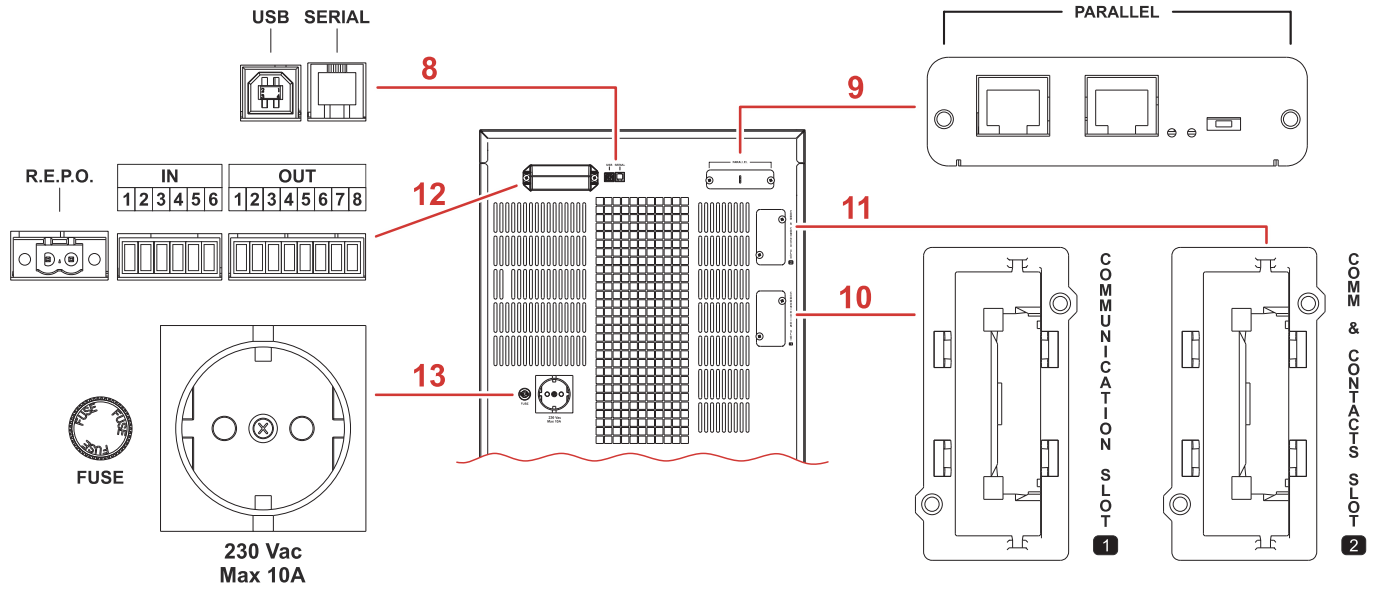

1. Touch screen display and CPS status LED
2. Battery start button (COLD START)
3. Mains input switch (SWIN)
4. Output switch (SWOUT)
5. Manual bypass switch (SWMB)
6. Internal battery fuse holder isolator (SWBATT)
7. Bypass input switch (SWBYP)
8. Communication ports (USB, SERIAL)
9. Parallel card (optional)
10. Slot for optional accessory communication cards
11. Slot for optional accessory communication and contacts cards
12. Communication ports (R.E.P.O., IN/OUT SIGNAL)
13. Schuko socket (10A max)

POWER CONNECTION DETAILS

The first wire to be connected is the protective earth wire, which is to be inserted in the terminal marked PE. During operation the CPS must be connected to the earthing system.

Connect the input and output cables to the terminal blocks as indicated in the figure below:

TERMINAL BLOCK COLOURS				
RED	**BLACK**	**GREY**	**BEIGE**	**BLUE**
External battery positive	External battery negative	Input & Bypass Phases	Output Phases	Input, Output and external battery Neutral

THE INPUT AND BYPASS NEUTRALS MUST ALWAYS BE CONNECTED.
THE INPUT AND BYPASS LINES MUST BE REFERENCED TO THE SAME NEUTRAL POTENTIAL.

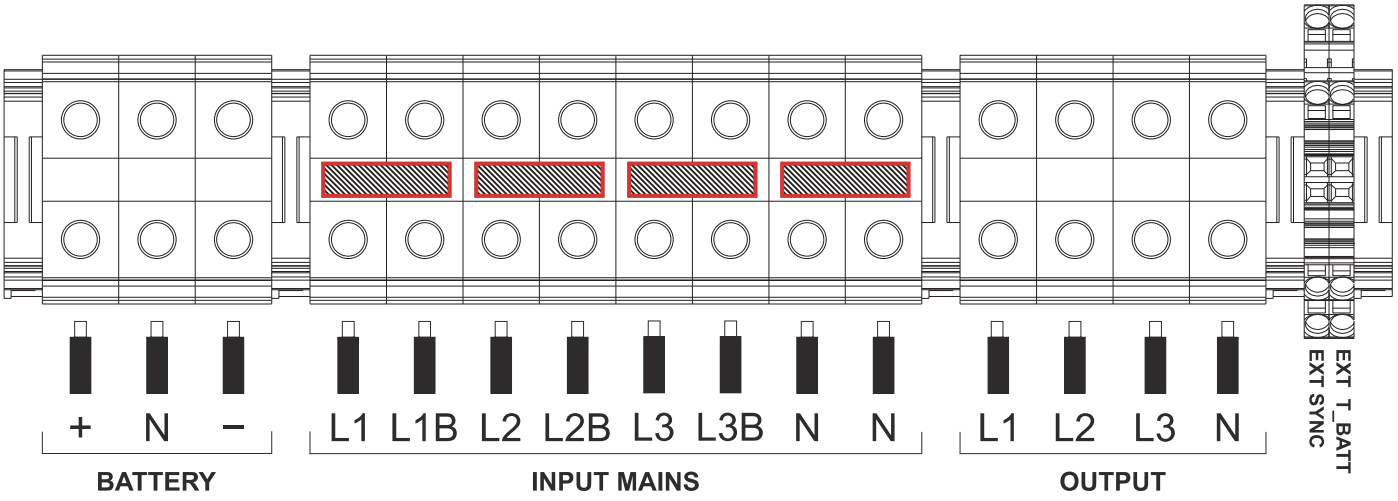

Jumpers (for more details about their installation or removal, refer to "APPENDIX")

The jumpers are installed by default to connect the bypass to input terminal blocks. Remove these jumpers if a separate bypass has to be connected.

Note: connection to the BATTERY terminal blocks is only required if an *(optional)* Battery Cabinet is present.

COMMUNICATION INTERFACE

R.E.P.O.

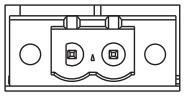

R.E.P.O.

This isolated input is used to turn the CPS off remotely in case of an emergency.
The CPS is supplied from the factory with the “Remote Emergency Power Off” (R.E.P.O.) terminals short-circuited (refer to "CPS DETAILS” paragraph). If it is to be installed, remove the short-circuit and connect to the normally closed contact of the stop device using a double insulated cable.
In case of emergency, by activating the stop device, the R.E.P.O. control is opened, and the CPS will shut-down (refer to USER MANUAL), and the load will be powered off completely.

The R.E.P.O. circuit is self-powered using a SELV type circuit. No external power supply voltage is therefore required. When it is closed (normal condition), a maximum current of 15mA is present.

NOTE: If more than one CPS is to be conected within the same R.E.P.O system. Each CPS must be provided with its own dedicated separate set of contacts. Do not connect the systems in parallel or series.

PROGRAMMABLE IN – OUT SIGNALS

The IN-OUT signals (refer to "CPS DETAILS” paragraph) have a standard factory configuration. The only input signal enabled is “**IN 5”**; the other signals must be enabled from the display panel.
For further information refer to the “User Manual”.
Moreover, all the signals can be programmed using the service configuration software reserved to service personnel only.

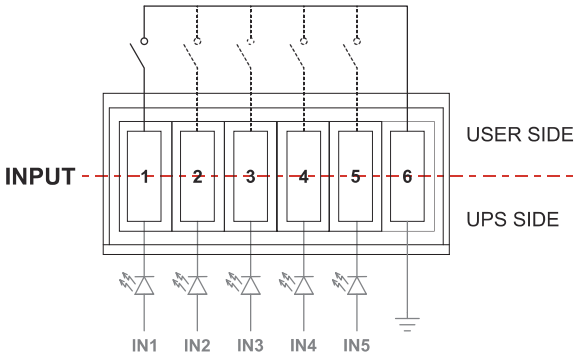

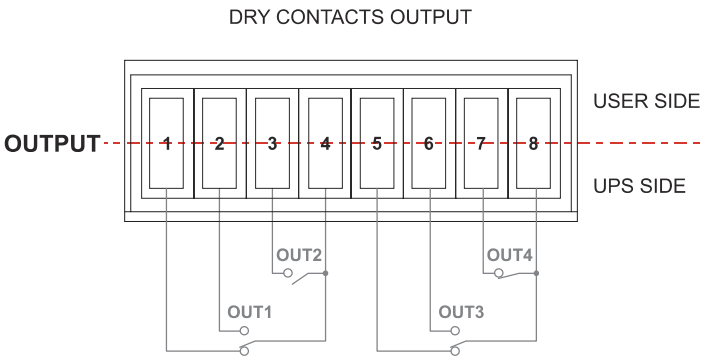

FACTORY DEFAULT SETTING

INPUT	FUNCTION
IN 1 #	Position of the External SWMB
IN 2 #	Position of the External SWOUT
IN 3 #	CB OFF
IN 4 #	Bypass ON
IN 5	System ON

These inputs must be enabled from the display panel

FACTORY DEFAULT SETTING:

OUTPUT	FUNCTION
OUT 1	Battery low
OUT 2	Battery working
OUT 3	System OK
OUT 4	Battery circuit alarm

The output dry contacts are rated to:
1A @ 24Vdc or 1A @ 30Vac

NOTE: In case of an external maintenance bypass or Battery Cabinet installation, the relative switch auxiliary contacts must be connected to these inputs and programmed.

USB/SERIAL RS232

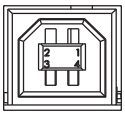

USB

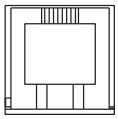

SERIAL RS232

Use these ports to connect the CPS to a server or PC for remote monitoring, service configuration or firmware update.

These two ports cannot be used simultaneously. The USB port is to be used as an alternative to the RS232 serial port.
USB port function is only guaranteed with a cable length of no more than 1.5m. Where a longer cable is required it is recommended that the RS232 serial interface is used.

COMMUNICATION SLOTS

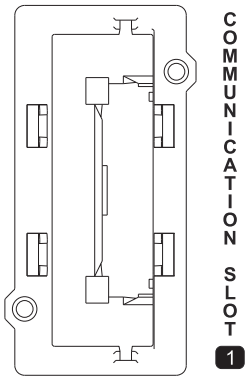

SLOT 1

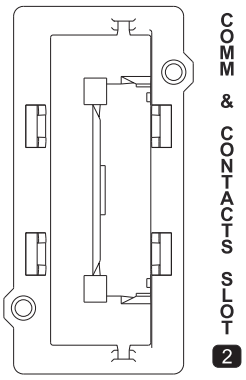

SLOT 2

The CPS is provided with two communication slots (refer to "CPS DETAILS" paragraph) which can be used to host optional communications cards. The slots are not interchangeable.

SLOT 1 - Communication Slot
Slot to accomodate the communication cards (no contact or relay cards).

SLOT 2 – Communication and Contacts Slot
Slot to accomodate additional communication cards (default configuration), or contact/relay expansion cards.

Please refer to the optional card kit user manual for further information.

APPENDIX

CHECKING THE PACKAGING CONTENTS

Inside the packaging, in addition to the CPS, there is the accessory box.

Check that the following items are present inside the accessory box:

USB pendrive
(containing the various manuals in different languages)

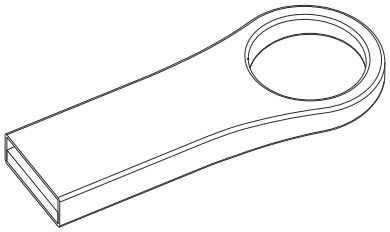

Download card +
risk of voltage backfeed labels (x3)



Installation manual



Safety manual + RAEE/WEEE manual

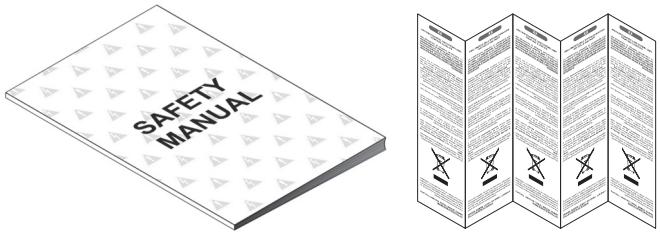

USB communication cable

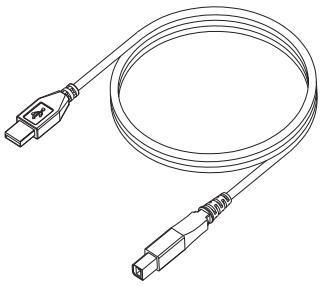

Battery fuses (x3)

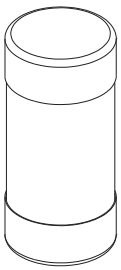

Grommet caps (x5)

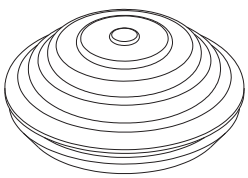

Plastic supports for cable ties (x12)

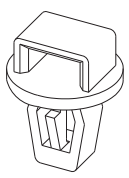

FIXING THE SIGNAL CABLE

It is possible to fix the signal cable to the dedicated accessory boards using the plastic supports inside the accessory box. For correct positioning and installation refer to the following images.

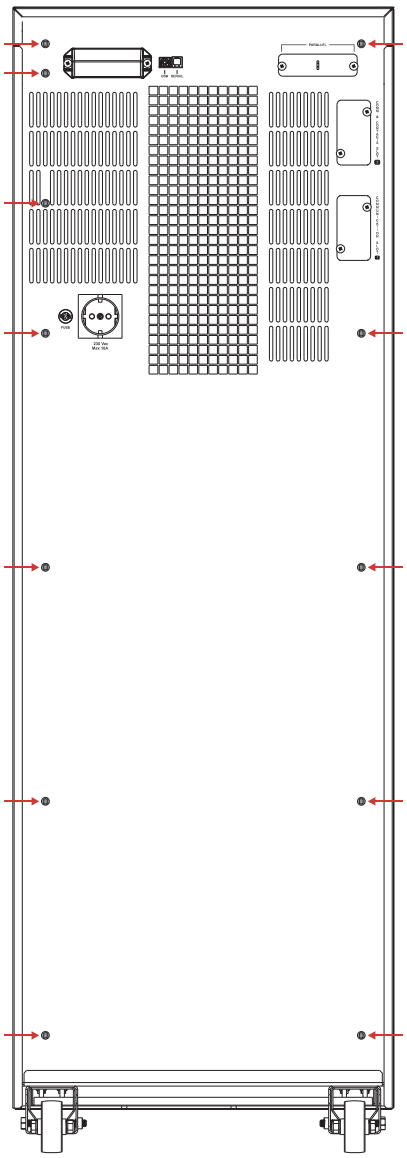

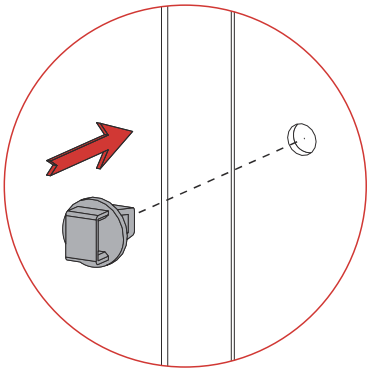

Insert the plastic supports in the provided holes

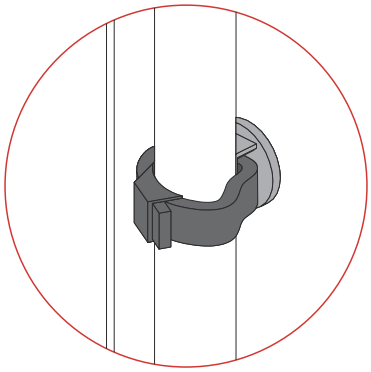

Secure the cable to the plastic supports with a cable tie

JUMPERS INSTALLATION/REMOVAL

To install or remove any jumpers refer to the following images.

Installation

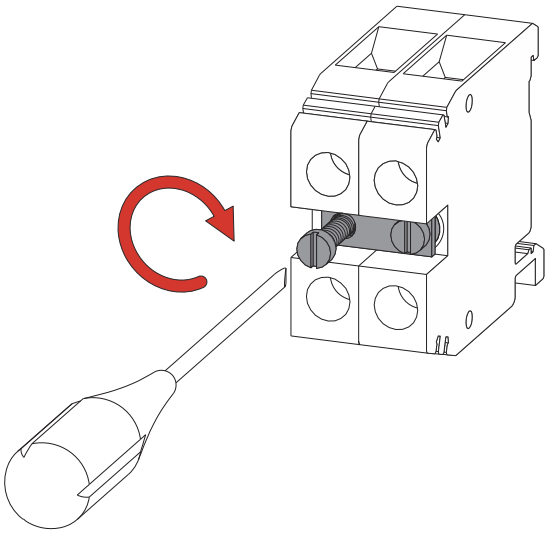

Removal

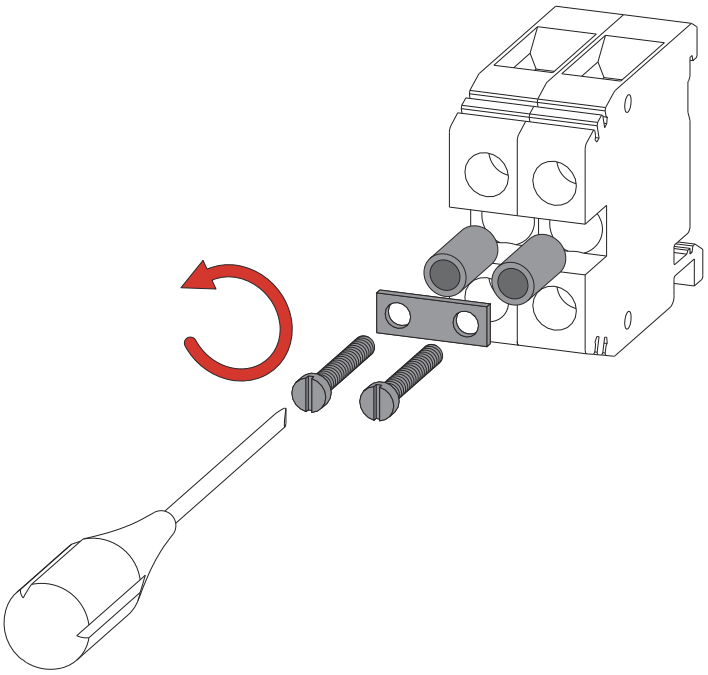

ANCHORING THE CPS TO THE FLOOR

In earthquake zones or on mobile systems, it is possible to reuse the brackets for pallet fastening (or slides) to anchor the CPS to the floor (see figure below). These brackets are not necessary in normal conditions.

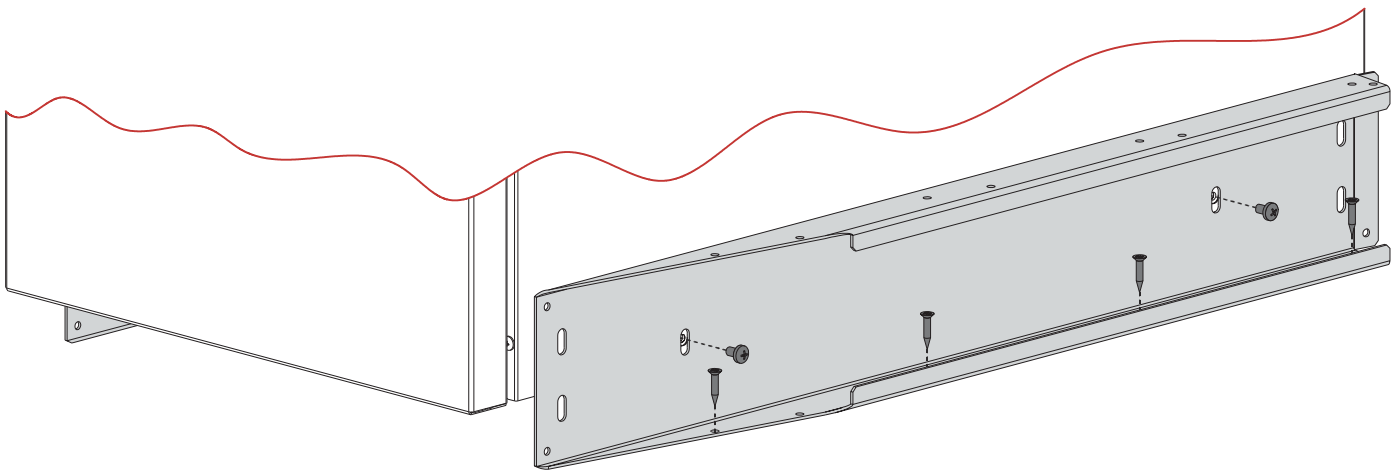

REMOVING DOOR

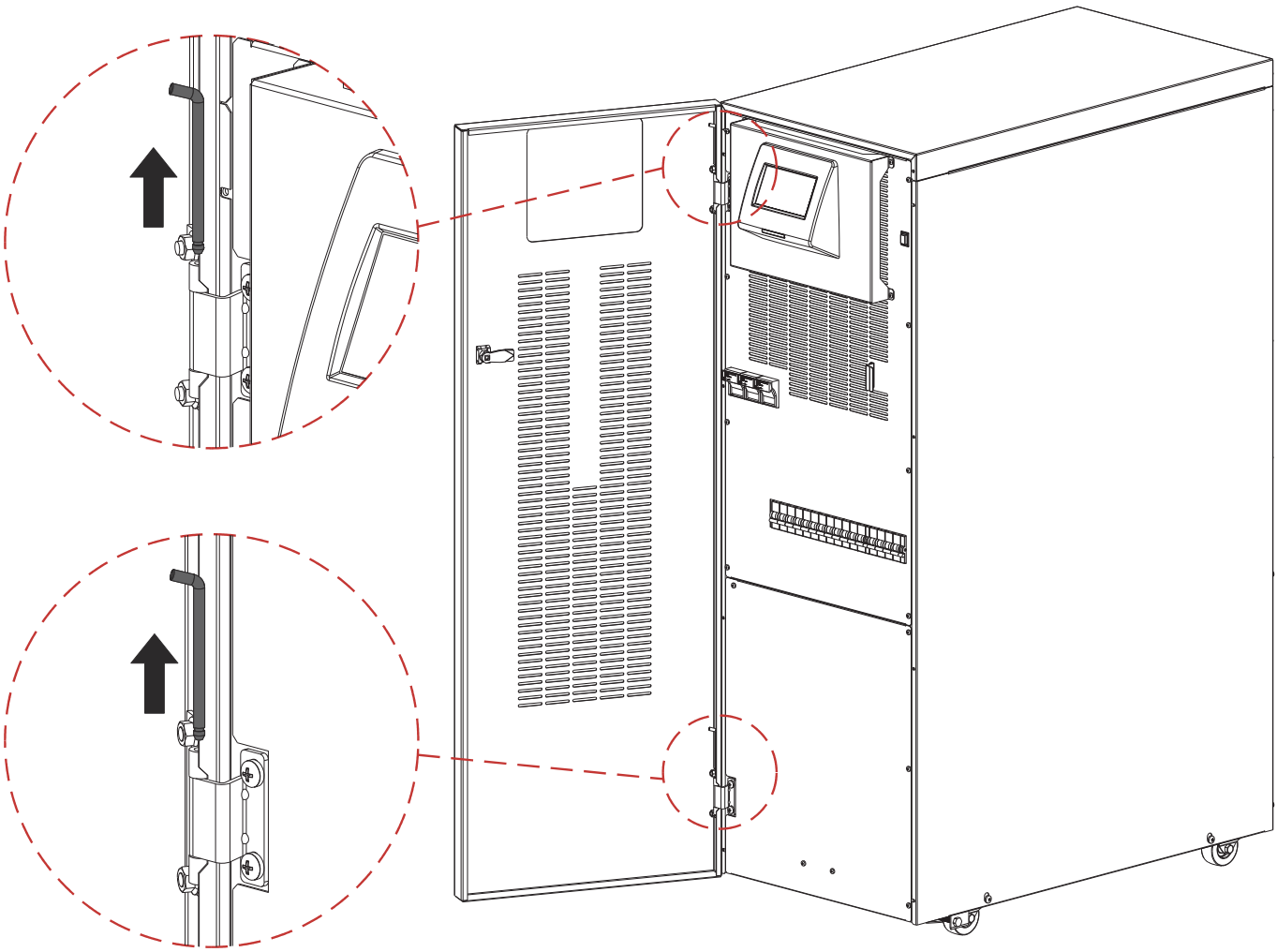

0MNCBT30K0NPENIC