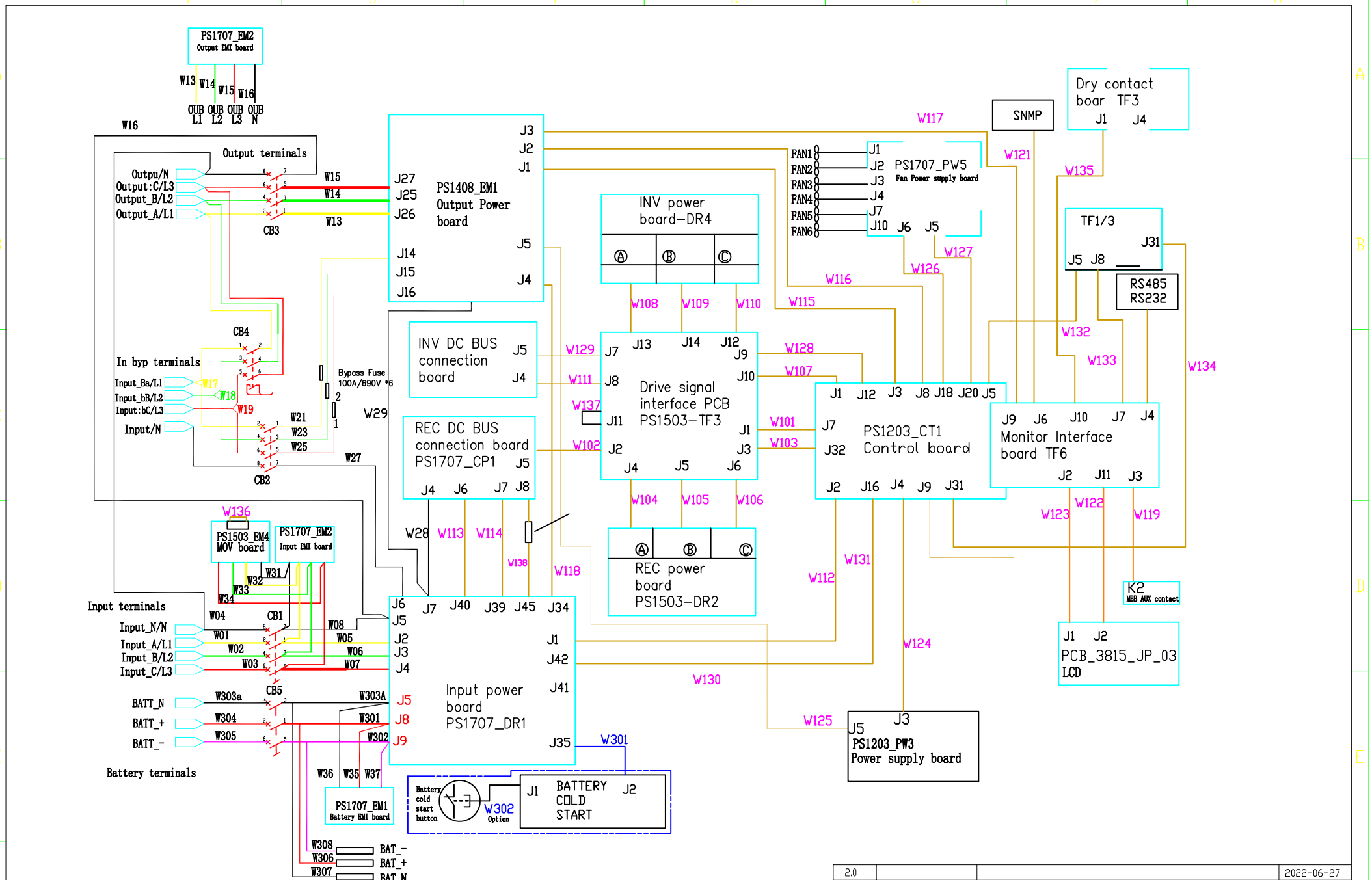

2.0			2022-06-27
Version	ECO NO.	Revision Description	DATE
No.	Page 1/2	Name	Figure NO.
Desiger	JackZhang		
Assessor	CCE	Product NOVA 40K	
Approver	SNI		