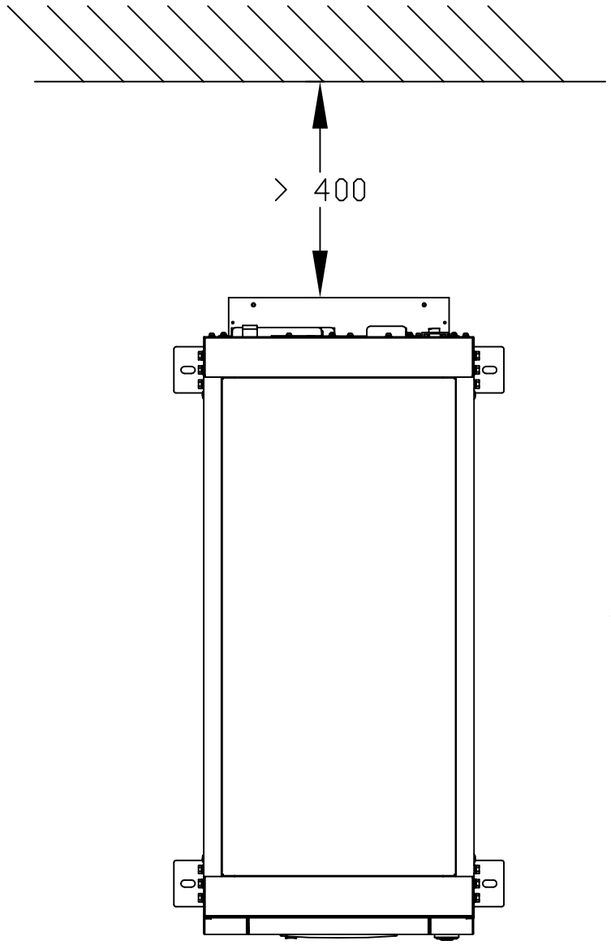

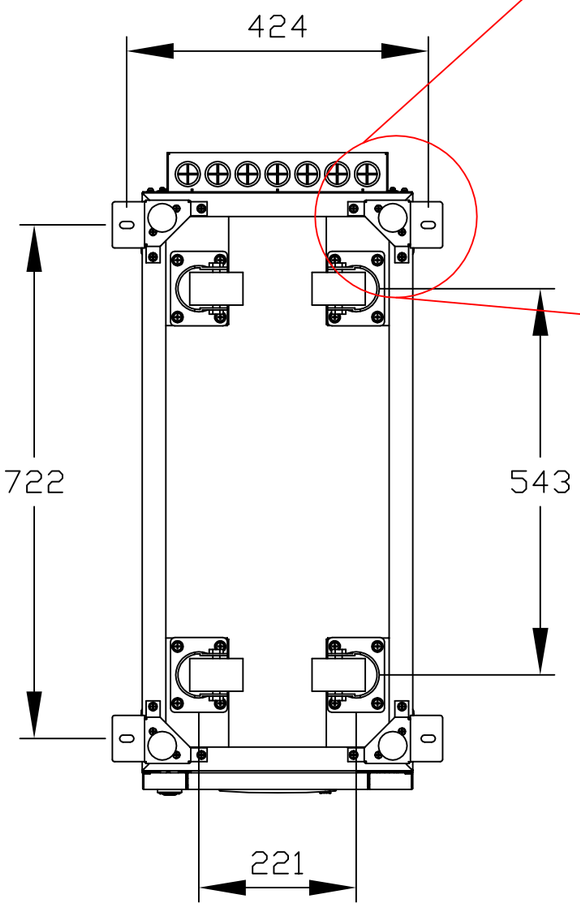

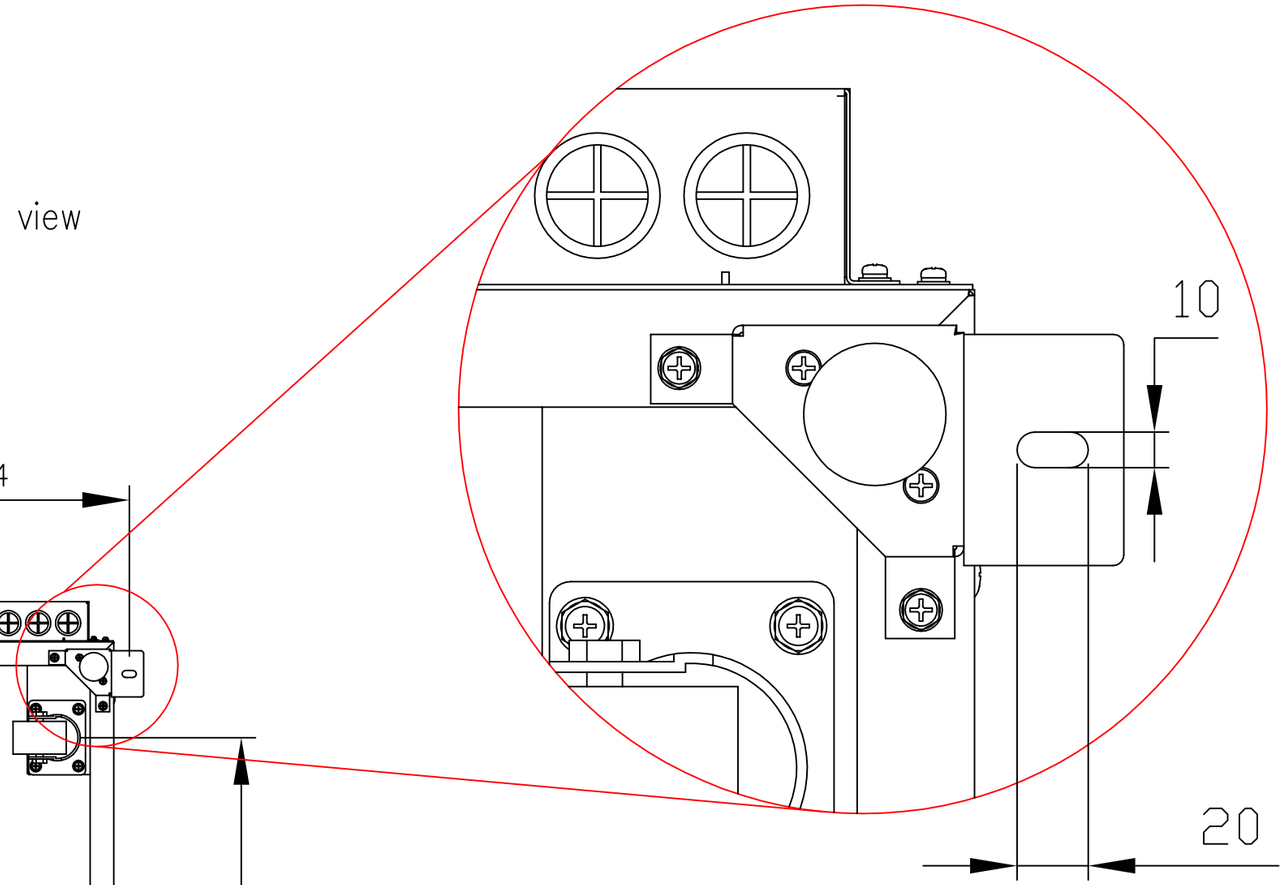

REFERENCE	DESCRIPTION	WEIGHT [kg]
NOVA-20K	20kva\18kw UPS w/o batteries	100
NOVA-20K-05	20kva\18kw UPS w/ 1x40 batteries 9Ah\12v	202
NOVA-20K-12	20kva\18kw UPS w/ 2x40 batteries 7Ah\12v	296
NOVA-20K-18	20kva\18kw UPS w/ 2x40 batteries 9Ah\12v	304
NOVA-20K-21	20kva\18kw UPS w/ 3x40 batteries 7Ah\12v	394
NOVA-20K-30	20kva\18kw UPS w/ 3x40 batteries 9Ah\12v	406

REV.	DESCRIPTION	SIGNED		
			DATE	15/01/2020
			DRAWN	Z.BETTANIN
			CONTROL	D.BINOTTO
			APPR.	C.CENTELEGHE

GTEC EUROPE s.r.l.
Strada Marosticana 81/13
36031 Povolaro di Dueville (VI) ITALY
www.gtec-power.eu

NOVA-20K

Installation

PROJECT ---

CUSTOMER ---

REV. 00

SHEET 01 OF 01