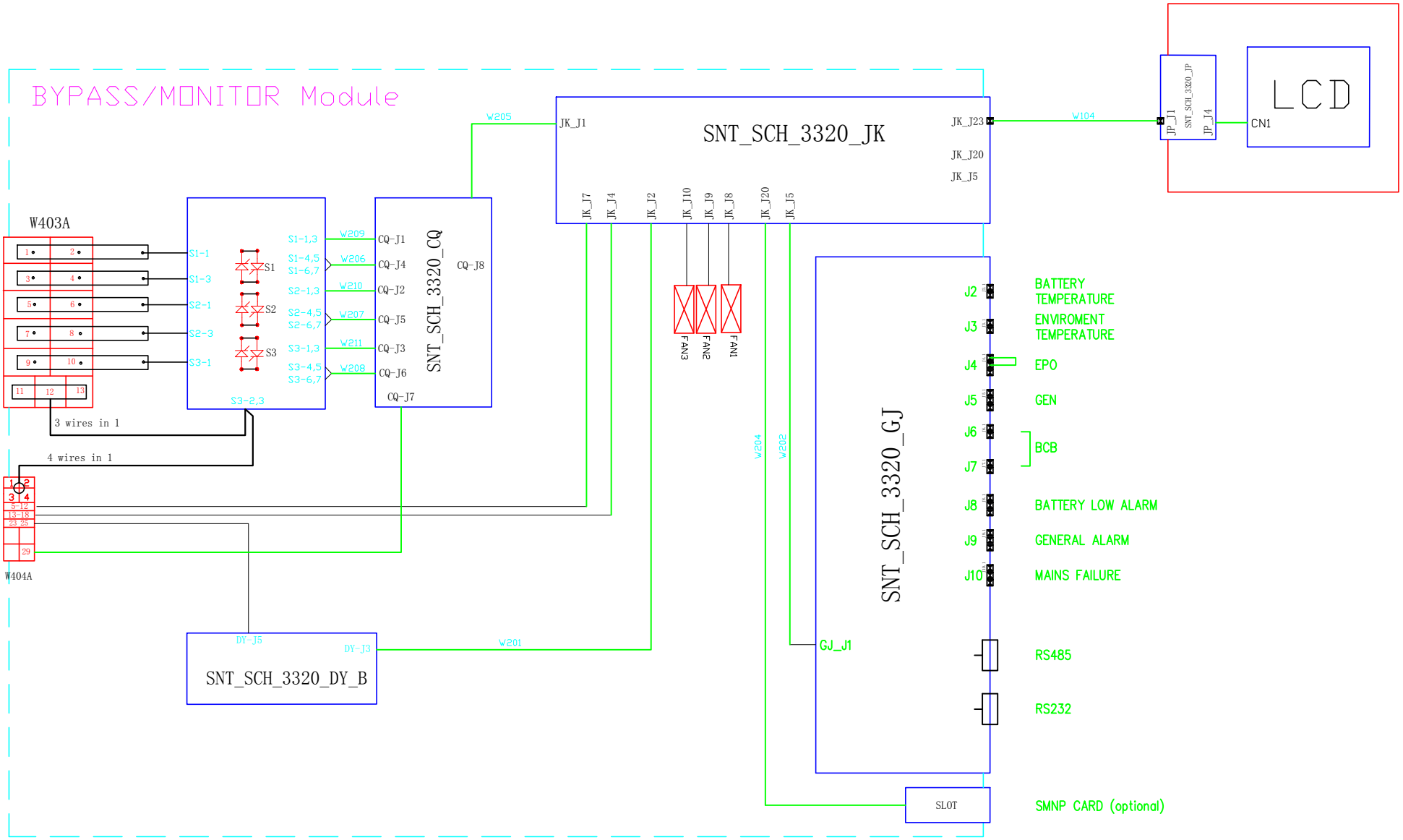


| | | | | | | | | | |
|---|---|---|---|---|---|---|---|---|---|
| | | | | DATE | 09/03/2015 | GTEC EUROPE s.r.l. | GENERAL DIAGRAM MUST400 | PROJECT --- | |
| | | | | DRAWN | Z.BETTANIN | Strada Marosticana 81/13 | BYPASS MODULE | | |
| | | | | CONTROL | C.CENTELEGHE | 36031 Povolaro di Dueville (VI) ITALY | | CUSTOMER --- | REV. 00 |
| REV. | DESCRIPTION | DATE | SIGNED | APPR. | S.NICOLI | www.gtec-power.eu | | | SHEET 01 OF 01 |