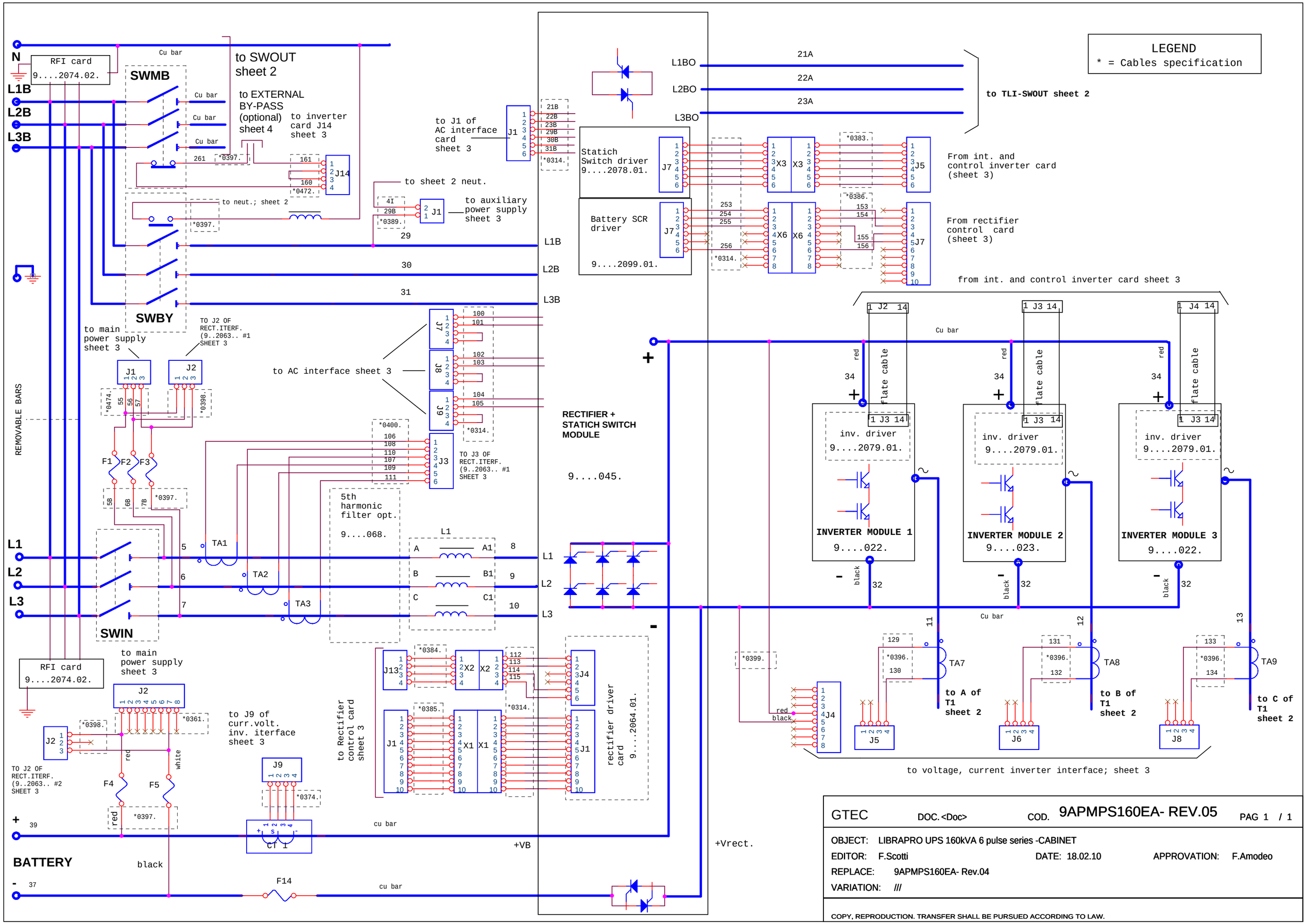

GTEC DOC. <Doc> COD. 9APMPS160EA- REV.05 PAG 1 / 1

OBJECT: LIBRAPRO UPS 160kVA 6 pulse series -CABINET

EDITOR: F.Scotti DATE: 18.02.10 APPROVATION: F.Amodeo

REPLACE: 9APMPS160EA- Rev.04

VARIATION: ///

COPY, REPRODUCTION. TRANSFER SHALL BE PURSUED ACCORDING TO LAW.

from SWMB
sheet 1

L1
L2
L3
N

to J2 of
AC interface
sheet 3

J2
1B 2B 3B 4B
*0394.

OUTPUT FILTER
9APMPS044B

C1 C2 C3 C4 C5 C6

F11 F12 F13

1A 2A 3A

TLI

TL I

*0391.
125 126 127 128
J3
1 2 3 4 5 6 7 8

to J3 of
driver TLI
sheet 3

to J6 of
AC interface
sheet 3

J6
1 2 3 4 5 6 7 8
*0393.
135 136 137 138 139 140

TA10 TA11 TA12

to inverter
card J9
sheet 3

J9
1 2 3 4
*0473.
151 152

to EXTERNAL
BY-PASS
(optional)
sheet 4

*0397.

21 22 23

SWOUT

to J4
mini-fit UGS
interface
sheet 4

*0532.

OUTPUT
L1
L2
L3
N

RFI card
9....2074.02.

from inverter
module 1
sheet 1

from inverter
module 2
sheet 1

from inverter
module 3
sheet 1

11 12 13

A B C

a b c n

T2

1 2 3

4

*0382.
162 163

to J12 pin 1-2of rectifier
control card
sheet 3

BLUE

TO PIN 2 OF
J1 AUX P.S.
SHEET 1/4

*0390.
4C 2C

to
driver TLI
sheet 3

J1
1 2

BLUE

to aux SWBY
sheet 1

21C 4E 22C 4F 4G 4H

F6 F7

222 223 *0392. 223B 223B

X4A X4B X5

*0280 *0280. *0281.

FN1 FN1 FN1 FN2

FANS PANEL
9....020.

FANS PANEL
9....020.

FANS PANEL
9....021.

from rect. +
st. switch module
sheet 1

L1BO 21A
L2BO 22A
L3BO 23A

LEGEND
* = Cables specification

GTEC DOC. Schematic Diagram COD. 9APMPS160EA- REV.05 PAG 2 / 4

OBJECT: LIBRAPRO UPS 160kVA 6 pulse series -CABINET
EDITOR: F.Scotti DATE: 18.02.10 APPROVATION: F.Amodeo
REPLACE: 9APMPS160EA- Rev.04
VARIATION: ///

COPY, REPRODUCTION. TRANSFER SHALL BE PURSUED ACCORDING TO LAW.

LEGEND
* = Cables specification

from F1;F2;F3 sheet 1
from F5;F6 sheet 1
mains power supply 9....2082.01.
display card 9....2033.04. or 9..0037.
to parallel signal connection card
parallel card 9....2034.01.
flat cable *0301.
flat cable *0367.
flat cable *0267.
flat cable *0302.
system card 9....2032.01.
to sheet 1
flat cable *0364.
to th T1 sheet 2
to sheet 1
flat cable *0365.
from sheet 1 SWMB
from sheet2 SWOUT
to J3 of inverter driver cards (inverter module) sheet 1
module 1
module 2
module 3
flat cable *0403.
flat cable *0369.
flat cable *0370.
rectifier control card 9....2075.01.
inteface and control inverter card 9....2076.01.
aux. power supply 9....2084.01.
from sheet1
from th battery
voltage and current rectifier interface 9....2063.03. 2
voltage and current rectifier interface 9....2063.03. 1
to sheet 1
voltage and current inverter interface 9....2096.02.
driver TLINV 9....2098.01.
flat cable *0402.
RC +interface AC 9....2077.02.
from sheet2 TLI
from sheet2
from TA4; TA5; TA6 sheet 1 rect+st.sw. module
from TA10; TA11; TA12 sheet 2
from rect. +st.sw.mod sheet 1
from sheet 2
from sheet1 (battery)
from TA1;TA2;TA3 sheet1
from sheet1 (F1 F2 F3)
from TA7;TA9;TA9; sheet 1
from CT1 sheet 1
from DC bus sheet 1

GTEC	DOC. Schematic Diagram COD. 9APMPS160EA- REV.05		PAG 3 / 4
OBJECT:	LIBRAPRO UPS 160kVA 6 pulse series -CABINET		
EDITOR:	F.Scotti	DATE: 18.02.10	APPROVATION: F.Amodeo
REPLACE:	9APMPS160EA- Rev.04		
VARIATION:	///		

COPY, REPRODUCTION. TRANSFER SHALL BE PURSUED ACCORDING TO LAW.

RS 232

J1

J2

9....2113.01.

RS232 card

EPO

REMOTE

J3

SLOT 1

SLOT 2

J8

20

*0586.

J7

20

*0587.

J2

J1

parallel signal card (option)

9....2101.01.

10

J3

*0301.

to J2 parallel card (option) sheet 3

J6

26

*0302.

1

26

to J4 of system card sheet 3

J10

*0407.

J7

9..2090.01.

I-O EXPANSION CARD 1 (OPTIONS)

J9

*0407.

J6

9..2090.01.

I-O EXPANSION CARD 2 (OPTIONS)

to J5 rectifier card sheet 3

to battery temperature sensor

1

14

J5 flat

9..2092.02.

J3

to J6 of inverter card sheet 3

*0532.

UGS INTERFACE (OPTIONS)

J2

*0532.

to J8 of system card sheet 3

J4

*0532.

to output fase-neutre sheet 3

to SWOUT sheet 2

151

251

to SWMB sheet 1

161

261

*0303.

*0297.

SWOUT SWMB

to EXTERNAL BY-PASS

LEGEND

* = Cables specification

GTEC	DOC. Schematic Diagram	COD. 9APMPS160EA- REV.05	PAG 4 / 4
OBJECT:	LIBRAPRO UPS 160kVA 6 pulse series -CABINET		
EDITOR:	F.Scotti	DATE: 18.02.10	APPROVATION: F.Amodeo
REPLACE:	9APMPS160EA- Rev.04		
VARIATION:	///		

COPY, REPRODUCTION. TRANSFER SHALL BE PURSUED ACCORDING TO LAW.