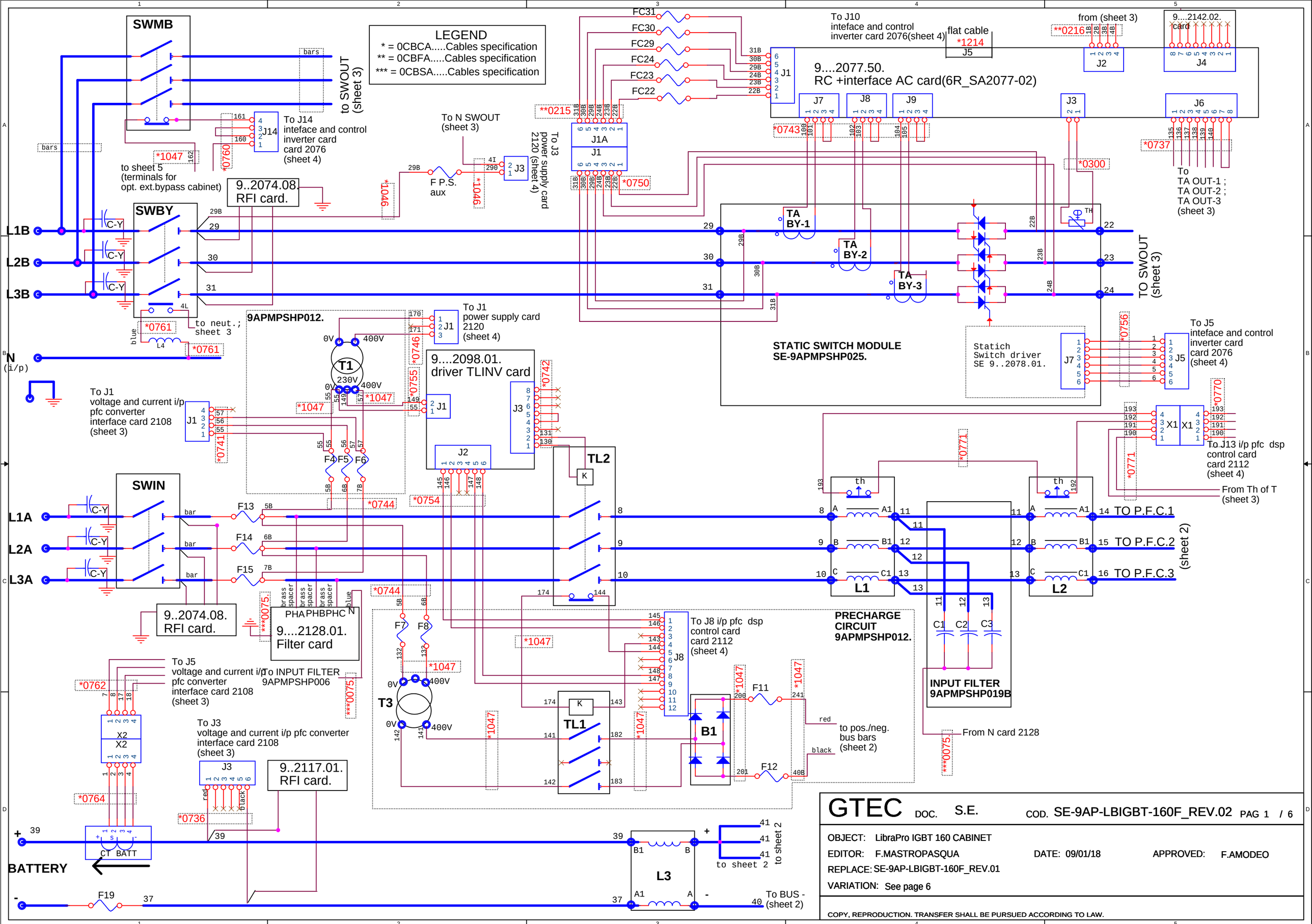

GTEC DOC. S.E. COD. SE-9AP-LBIGBT-160F_REV.02 PAG 1 / 6

OBJECT: LibraPro IGBT 160 CABINET

EDITOR: F.MASTROPASQUA DATE: 09/01/18 APPROVED: F.AMODEO

REPLACE: SE-9AP-LBIGBT-160F_REV.01

VARIATION: See page 6

COPY, REPRODUCTION. TRANSFER SHALL BE PURSUED ACCORDING TO LAW.

To J7
voltage and current i/p
pfc converter
interface card 2108
(sheet 3)

To J2
power supply card
2120
(sheet 4)

J7 1 2 3 — *0747 — red, black

J2 1 2 3 4 5 6 7 8 — 42 red, 46 white — *0740

F9, F10

*0761

red, black

from B1
(sheet 1)

241 — *1047 — 408

from L3 (+)
(sheet 1)

41, 41, 41

40

To J10 i/p pfc dsp control card 2112 (sheet 4) — flat cable *0880 — J3 14 — 9....2102.01. igbt driver card — pfc rect.

To J9 i/p pfc dsp control card 2112 (sheet 4) — flat cable *0883 — J3 14 — 9....2102.01. igbt driver card — step up/down batt.

To J2 inteface and control inverter card card 2076 (sheet 4) — flat cable *0879 — J3 14 — 9....2102.01. igbt driver card — Inv

To J7 i/p pfc dsp control card 2112 (sheet 4) — flat cable *0881 — J3 14 — 9....2102.01. igbt driver card — pfc rect.

To J6 i/p pfc dsp control card 2112 (sheet 4) — flat cable *0882 — J3 14 — 9....2102.01. igbt driver card — step up/down batt.

To J3 inteface and control inverter card card 2076 (sheet 4) — flat cable *0880 — J3 14 — 9....2102.01. igbt driver card — Inv

To J3 i/p pfc dsp control card 2112 (sheet 4) — flat cable *0881 — J3 14 — 9....2102.01. igbt driver card — pfc rect.

To J2 i/p pfc dsp control card 2112 (sheet 4) — flat cable *0882 — J3 14 — 9....2102.01. igbt driver card — step up/down batt.

To J4 inteface and control inverter card card 2076 (sheet 4) — flat cable *0880 — J3 14 — 9....2102.01. igbt driver card — Inv

IGBT, C-INV

To J4
voltage and current i/p
pfc converter
interface card 2108
(sheet 3)

J4 1 2 3 — red, white, black — *0747

CT1 — CONVERTER MODULE RIGHT SE-9APMPSHP022C. — CT2 — PHASE 1

CT3 — CONVERTER MODULE LEFT SE-9APMPSHP021C. — CT4 — PHASE 2

CT5 — rect. c.t. — CONVERTER MODULE RIGHT SE-9APMPSHP022C. — CT6 — PHASE 3

*0764 — 14 — From L2 (A1) (sheet 1) — X2 / X2-1 — *0762 — To J5 voltage and current i/p pfc converter interface card 2108 (sheet 3)

*0874 — 17 — To T (A) (sheet 3) — X3 / X3-1 — *0749 — To J9 voltage and current i/p pfc converter interface card 2108 (sheet 3)

*0764 — 15 — From L2 (B1) (sheet 1) — X2 / X2-2 — *0762 — To J5 voltage and current i/p pfc converter interface card 2108 (sheet 3)

*0874 — 18 — To T (B) (sheet 3) — X3 / X3-2 — *0749 — To J9 voltage and current i/p pfc converter interface card 2108 (sheet 3)

*0764 — 16 — From L2 (C1) (sheet 1) — X2 / X2-3 — *0762 — To J5 voltage and current i/p pfc converter interface card 2108 (sheet 3)

*0874 — 19 — To T (C) (sheet 3) — X3 / X3-3 — *0749 — To J9 voltage and current i/p pfc converter interface card 2108 (sheet 3)

GTEC DOC. S.E. COD. SE-9AP-LBIGBT-160F_REV.02 PAG 2 / 6

OBJECT: LibraPro IGBT 160 CABINET
EDITOR: F.MASTROPASQUA DATE: 09/01/18 APPROVED: F.AMODEO
REPLACE: SE-9AP-LBIGBT-160F_REV.01
VARIATION: See page 6

COPY, REPRODUCTION. TRANSFER SHALL BE PURSUED ACCORDING TO LAW.

FAN PANEL 9APMPSHP010.
FN1
FN2
FN3
*0781
X5
X5
*0752
FAN PANEL 9APMPSHP008.
FN4
*0270
X4
X4B
FAN PANEL 9APMPSHP009.
FN5
*0270
X4
X4A
F1
F2
F3
22
23
24
22A
23A
24A
24B
*0748
From J2 RC + INTERFACE AC interface card 2077 (sheet 1)
J2
***0216
FC3
FC2
FC1
FROM SHEET 1 (ST. SWITCH)
From J6
RC + INTERFACE AC interface card 2077 (sheet 1)
J6
*0737
TA OUT-1
TA OUT-2
TA OUT-3
9..2074.08.
RFI card.
FROM SHEET 1 (SWMB)
SWOUT
C-Y
L1O
L2O
L3O
NO
NI
To J3 of power supply (sheet 1-4)
to aux. contact of SWBY (sheet1)
4I
4L
153
*0759
J9
To J9
inteface and control inverter card
card 2076
(sheet 4)
*1047
to sheet 5
(terminals for
opt. ext.bypass cabinet)
from J3 of
UGS interface card 2159
(option) sheet 5
***0324
***0324
To X1
(sheet 1)
190
191
*0771
*0751
J2A
J2
FROM O/P INV. (SHEET 2)
17
18
19
A
B
C
th
T
n
a
b
c
4
TL3
F16
F17
F18
1
2
3
127
128
K
125
126
C4
C5
C6
C7
C8
C9
OUTPUT FILTER
9APMPSHP024B
*0757
1C
4C
J1
J3
*1051
9....2098.01.
driver TLINV card
J2
*0739
J13
To J13
inteface and control
inverter card
card 2076
(sheet 4)
from inverter C.T.2
MOD 1 (sheet 2)
from inverter C.T.4.
MOD 2 (sheet 2)
from inverter C.T.6
MOD 3 (sheet 2)
X3-1
X3-2
X3-3
To J1
inteface and control inverter
card 2076
(sheet 4)
J1
*0354
*0749
J9
J8
9..2108.08.
voltage and
current i/p pfc converter
interface card
J5
J3
J1
J4
J7
J2
34
*0762
*0736
red
black
from input
battery
(sheet 1)
*0741
from F4-F5-F6
(sheet 1)
red
white
black
*0747
from DC bus
(sheet 2)
red
black
from F9-F10
(sheet 2)
flat cable
*1215
To J11
i/p pfc dsp control card
card 2112
(sheet 4)
X2-1
X2-2
X2-3
X2-BATT
from rect.
C.T.1 MOD 1
(sheet 2)
from rect.
C.T.3 MOD 2
(sheet 2)
from rect.
C.T.5 MOD 3
(sheet 2)
from CT BATT
(sheet 1)

GTEC

DOC. S.E. COD. SE-9AP-LBIGBT-160F_REV.02 PAG 3 / 6

OBJECT: LibraPro IGBT 160 CABINET

EDITOR: F.MASTROPASQUA DATE: 09/01/18 APPROVED: F.AMODEO

REPLACE: SE-9AP-LBIGBT-160F_REV.01

VARIATION: See page 6

COPY, REPRODUCTION. TRANSFER SHALL BE PURSUED ACCORDING TO LAW.

PARALLEL OPTION

To J3 parallel signal card 2101 (sheet-5)

*0037 flat cable *0301 J2

J1

9....2034.01.
paralel card
optional
(Board panel)

J3 34
*0267 flat cable
J2

from J1 of UGS interface card 2159 (option) sheet 5

***0324

J8
Connect only for option UGS

From F9-F10 (sheet 2)

red white

*0740

42 46

J2

To T1 (sheet 1)

170 171

*0746

J1

9....2120.01.
power supply card
(Board panel)

J6 flat cable *0367 40 J1

*1046

290 41

J3

From FPS-AUX (sheet 1)

From N(sheet 3)

J4

*0351

From SWMB (sheet 1)

*0760

160 161

From SWOUT (sheet 3)

*0759

152 151

from J2 of UGS interface card 2159 (option) sheet 5

***0324

To INVERTER MODULE (sheet 2)

Phase 1 flat cable *0879 J2 14

Phase 2 flat cable *0880 J3 14

Phase 3 flat cable *0880 J4 14

J8 J14 J9 J6
Connect only for option UGS

10 J5 flat cable *0365 J12

J3 flat cable *0364 J11 50

9....2032.02.
system card
(Board panel)

9....2076.01.
inteface and control inverter card
(Board panel)

To rect. module igbt drivers (sheet 2)

Phase 1 flat cable *0880 J10 PR1 14
Phase 2 flat cable *0881 J7 PR2 14
Phase 3 flat cable *0881 J3 PR3 14

To rect. module step u/d igbt drivers (sheet 2)

Phase 1 flat cable *0883 J9 PB1 14
Phase 2 flat cable *0882 J6 PB2 14
Phase 3 flat cable *0882 J2 PB3 14

50 J4 flat cable *0364 J15 26

26 J6 flat cable *1463 J5

20 J7 flat cable *1466 J4

J6 26

9....2132.01.
display panel

J1 26 flat cable *1465 J5

J1 J10 26 flat cable *1214

*0354

J8

From J8
voltage and
current i/p pfc converter
interface card 2108
(sheet 3)

J5 *0756 J7

From J7
Statich
Switch driver
card 2078
(sheet 1)

J13 *0739 J2

From J2
driver TLINV
card 2098
(sheet 3)

From J5
RC + INTERFACE AC
interface card 2077
(sheet 1)

To sheet 1

145 146 143 144 148 147

J8

*0754

9..2112..01
i/p pfc dsp control card
(Board panel)

J13

190 191 192 193

*0770

X1

To X1
(sheet 1)

J14 164 165

*0357

To battery temperature sensor (sheet 5)

BALANCE J1 13 14

J11 34 flat cable *1215

From J2
voltage and
current i/p pfc converter
interface card 2108
(sheet 3)

9....2124.01.
grafic panel control card
(Board panel)

J7 2 1 *0032

J2 26 flat cable *1470

To J6 RS232 CARD 2113
(sheet-5)

J1 26 flat cable *1469

To SLOT-1 MAIN
(sheet-5)

GTEC	DOC. S.E.	COD. SE-9AP-LBIGBT-160F_REV.02	PAG 4 / 6
OBJECT: LibraPro IGBT 160 CABINET			
EDITOR: F.MASTROPASQUA	DATE: 09/01/18	APPROVED: F.AMODEO	
REPLACE: SE-9AP-LBIGBT-160F_REV.01			
VARIATION: See page 6			

COPY, REPRODUCTION. TRANSFER SHALL BE PURSUED ACCORDING TO LAW.

OPTION PANEL

RS 232
EPO
REMOTE
J1
J2
J3
9....2113.01.
RS232 CARD
J7 20
J8 N.C
SLOT-2 AUX
SLOT-1 MAIN
flat cable **0011
flat cable *1469
To J1 grafic panel control card 2124(sheet 4)
J2
J1
9....2101.01.
parallel signal card (OPTION)
J3 10
flat cable *0301
to J2 parallel card (option) sheet 4

PARALLEL OPTION

J9
J6
*0407
flat cable *1470
To J2 grafic panel control card 2124(sheet 4)

INTERFACE I/O OPTION

*0407
J6
9....2090.01.
INTERFACE I/O CARD-1
J9
J6
9....2090.01.
INTERFACE I/O CARD-2
J9
9....2137.02.
FILTER CAN-BUS 2090 CARD

UGS INTERFACE OPTION

To J6 interface and inverter control card 2076 (sheet 4)
***0324
J2
J5
J4
9....2159.01.
UGS INTERFACE (OPTION)
J1
J3
***0324
***0324
brown
blue
To J8 system catd 2032 (sheet 4)
To output PH-N (sheet 3)

To J14 i/p pfc dsp control card card 2112 (sheet 4)
*0357
164
165
to battery temperature sensor

to SWOUT sheet 2
to SWMB sheet 1
152
153
160
162
SWOUT SWMB
to EXTERNAL BY-PASS
*0397

BATTERY START OPTION

From F12-F13 (sheet 2)
red
white
*1108
42
46
J2
*1347
J2
J3
J1
171
J4
J6
9....2120.01.
power supply card
(Board panel)

On standard power supply card 9..2120.01:
1-Disconect the standard cable code *1108 from J2.
2-Connect the cable code *1347.
3-Connect the cable code *1108 previus diconnect

J10 PR1 14
J7 PR2 14
J3 PR3 14
J9 PB1 14
J6 PB2 14
J2 PB3 14
J15
26
J5
J8
J13
J14
BALANCE
J1 13 14
J11 34
9..2112..01
i/p pfc dsp control card
(Board panel)

BATTERY TEMPERATURE SENSOR OPTION

On standard i/p pfc dsp control card 9..2112.01:
1-Disconect the standard cable code *0357 from J14.
2-Connect the filter code 9APMHT019.
3-Connect the cable code *0357 previus diconnect

FILTER 9APMHT019.
J14
165
164
*0357

GTEC	DOC. S.E.	COD. SE-9AP-LBIGBT-160F_REV.02	PAG 5 / 6
OBJECT: LibraPro IGBT 160 CABINET			
EDITOR: F.MASTROPASQUA		DATE: 09/01/18	APPROVED: F.AMODEO
REPLACE: SE-9AP-LBIGBT-160F_REV.01			
VARIATION: See page 6			

COPY, REPRODUCTION. TRANSFER SHALL BE PURSUED ACCORDING TO LAW.

VARIATIONS:
16/01/2015-From SE_9AP-LBIGBT-160F_REV.00 to SE_9AP-LBIGBT-160F_REV.01:
-Cables to J7 2108 card modified position from from DC bus bar(Page 2) to fuses F9-F10(Page 2).
09/01/18-From SE_9AP-LBIGBT-160F_REV.01 to SE_9A-LBIGBT-160F_REV.02:
-Change interface card UGS
-Insert card 2142

GTEC	DOC. S.E.		COD. SE-9AP-LBIGBT-160F_REV.02	PAG 6 / 6
OBJECT:	LibraPro IGBT 160 CABINET			
EDITOR:	F.MASTROPASQUA	DATE: 09/01/18	APPROVED:	F.AMODEO
REPLACE:	SE-9AP-LBIGBT-160F_REV.01			
VARIATION:	-			

COPY, REPRODUCTION. TRANSFER SHALL BE PURSUED ACCORDING TO LAW.